datamax·o'neil
right by our customers.

E CLASS® Mark II

Operator's Manual

Copyright Information:

Firmware (Software) Agreement:

The enclosed Firmware (Software) resident in the Printer is owned by Licensor or its suppliers and is licensed for used only on a single printer in the user's Trade or Business. **The User agrees not to, and not to authorize or permit any other person or party to, duplicate or copy the Firmware or the information contained in the non-volatile or programmable memory.** The firmware (Software) is protected by applicable copyright laws and Licensor retains all rights not expressly granted. In no event will Licensor or its suppliers be liable for any damages or loss, including direct, incidental, economic, special, or consequential damages, arising out of the use or inability to use the Firmware (Software).

Information in this document is subject to change without notice and does not represent a commitment on the part of Datamax-O'Neil Corporation. No part of this manual may be reproduced or transmitted in any form or by any means, for any purpose other than the purchaser's personal use, without the expressed written permission of Datamax-O'Neil Corporation.

Part Number: 88-2348-01

Revision: A

Important Safety Instructions:

This printer has been carefully designed to provide many years of safe, reliable performance. As with all types of electrical equipment, however, there are a few basic precautions you should take to avoid hurting yourself or damaging the device:

- Carefully read the installation and operating instructions provided with your printer.
- Read and follow all warning instruction labels on the printer.
- Place the printer on a flat, firm, solid surface.
- To protect your printer from overheating, make sure all openings on the printer are not blocked.
- Do not place the printer on or near a heat source.
- Do not use your printer near water, or spill liquid into it.
- Be certain that your power source matches the rating listed on your printer. If you are unsure, check with your dealer or with your local power company.
- Do not place the power cord where it will be walked on. If the power cord becomes damaged or frayed replace it immediately.
- Do not insert anything into the ventilation slots or openings on the printer.
- Only qualified, trained service technicians should attempt to repair your printer.

Agency Compliance and Approvals:

UL60950-1, First Edition, Information Technology Equipment
CSA C22.2 No. 60950-1-03, First Edition

IEC 60950-1 :2001, First Edition

As an Energy Star Partner, the manufacturer has determined that this product meets the Energy Star guidelines for energy efficiency.

The manufacturer declares under sole responsibility that this product conforms to the following standards or other normative documents:

EMC: EN 55022 (1998) Class A
EN 50024 (1998)

Safety: This product complies with the requirements of IEC 60950-1:2001, First Edition

Gost-R

FCC: This device complies with FCC CFR 47 Part 15 Class A.

☑ **Note:** This equipment has been tested and found to comply with the limits for a Class A digital device, pursuant to Part 15 of the FCC Rules. These limits are designed to provide reasonable protection against harmful interference when the equipment is operated in a commercial environment. This equipment generates, uses, and can radiate radio frequency energy, and if not installed and used in accordance with the instructions in this manual, it may cause harmful interference to radio communications. Operation of this equipment in a residential area is likely to cause harmful interference in which case the user will be required to correct the interference at his own expense.

Contents

Getting Started

Printer Setup

Printer Operation

Maintenance and Adjustments

Troubleshooting

Appendices

1 Getting Started

1.1 Introduction

The E-Class Mark II (hereafter referred to as 'the printer') are user-friendly devices that blend quality and durability into an affordable package. The printer, available in direct and optional thermal transfer configurations, uses a unique front panel design to simplify operation, while it's RS232 serial, USB, parallel, and optional LAN interfaces allow easy connection to your host system.

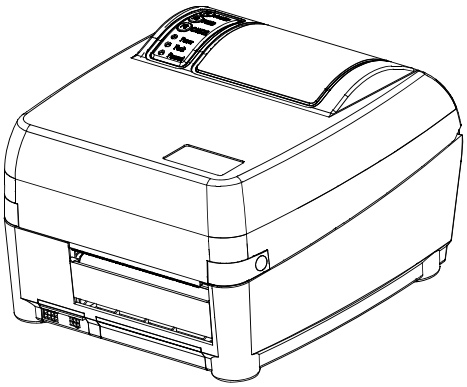

This manual provides all the information necessary to operate the printer.

To print labels or tags simply refer to the instructions included with the software you have chosen to create the labels. A Windows printer driver can be found on our website (www.datamax-oneil.com) or on the included Accessories CD-ROM.

If you wish to write a custom program, a copy of the *Class Series Programmer's Manual* (part number 88-2341-01) can be found on this CD-Rom or our website.

1.2 About this Printer

After removing the printer from the packaging material, check the contents. The following items should be included:

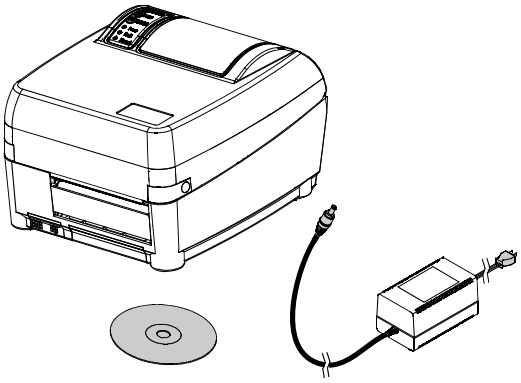

- Printer
- Power supply
- Accessories CD-ROM
- Any special or additionally ordered items

Additional Requirements

The following items are necessary for generating labels from your printer. Contact your customer support or sales representative for advice on which media and software may best be suited for your application.

- Serial, USB or Parallel cable
- Ethernet cable for optional LAN connectivity
- Applicable Media

It is a good idea to save all packaging materials in the event that shipping the printer is ever required.

2 Printer Setup

2.1 Introduction

This section explains how to connect your printer, load media (and ribbon, if equipped for thermal transfer), and print a configuration label.

2.2 Connecting the Printer

2.2.1 Power Connection

Before connecting the AC Power Cord or interface cables to the printer, ensure the Power On/Off Switch is in the 'Off' position.

The printer is powered by an external auto-ranging power supply, which connects between the printer and wall outlet as shown below.

Before connecting, ensure that the range of the printer's power supply is compatible with your electrical service (see Appendix A - Specifications for details).

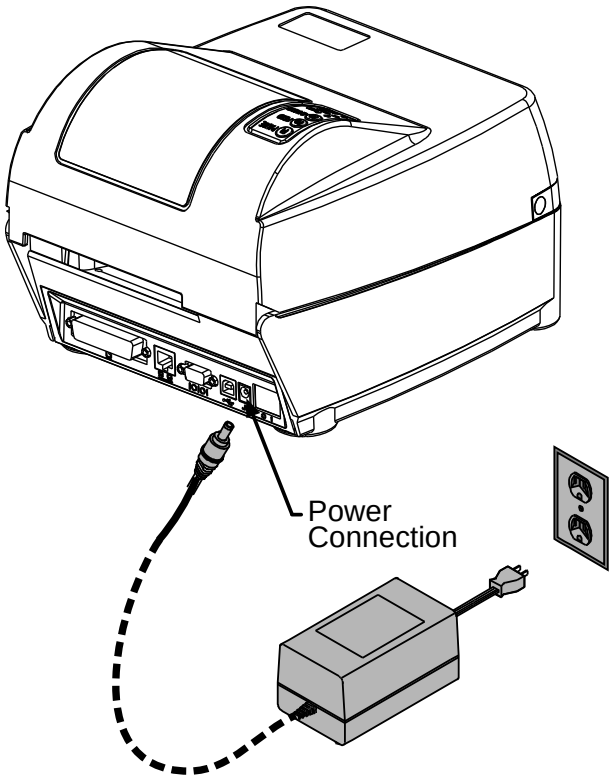

2.2.2 Interface Connection

The printer can be connected to the host via a USB, serial, or parallel cable.

An optional Wired or Wireless LAN interface is also available. For information on using this interface, refer to Appendix C.

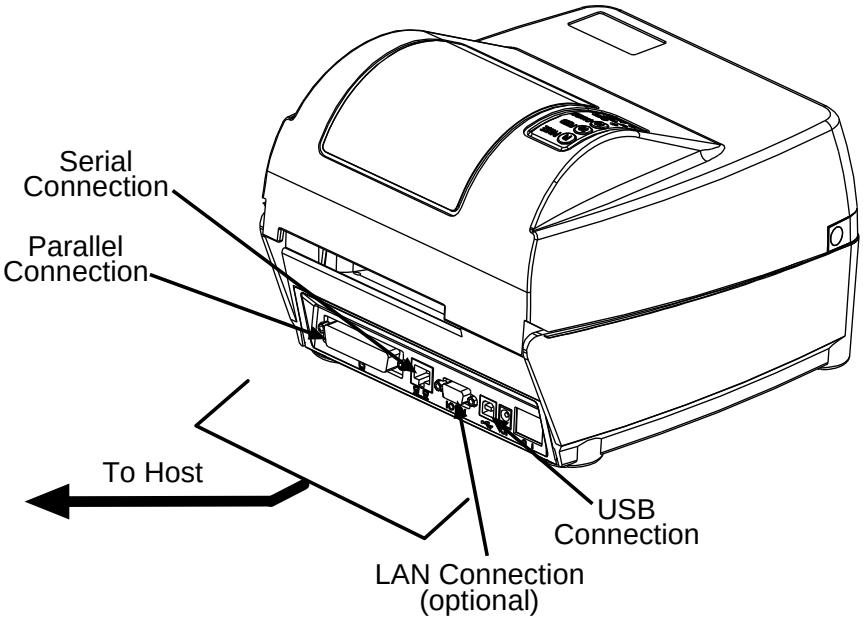

2.2.3 Interface Cables

Choose a connection method that will best serve your purpose:

- To connect the printer to the host's serial (RS-232C) interface use an acceptable cable configuration, as shown below (contact your reseller for ordering information).

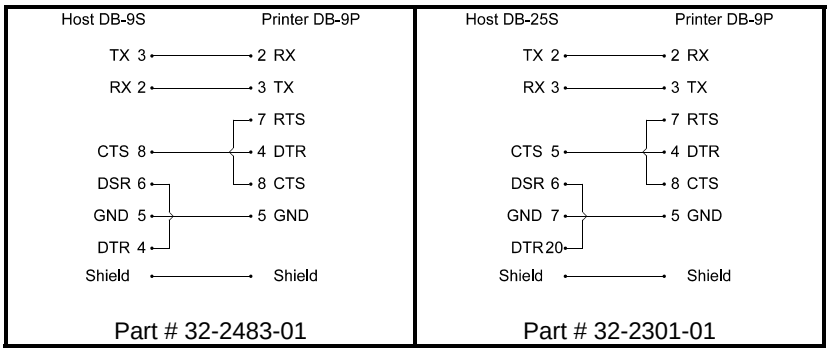

- To connect the printer to the host's parallel interface use a Centronics parallel cable.
- To connect the printer to the host's USB interface use a standard USB cable.

Note that the printer has a versatile communications feature: When connected to more than one interface, the printer will automatically connect to the first port (serial, parallel, or USB) from which valid data is received. After this connection has been made, the printer's power must be cycled 'Off' and 'On' to change the interface connection.

2.3 Adjusting the Media Sensor

The printer is available with a Fixed-Position Media Sensor or an Adjustable Media Sensor. To identify the type of sensor in your printer, proceed as follows:

1. Open the cover.
2. Push down the Printhead Latch and raise the Printhead Carrier Assembly.

The **Fixed-Position Media Sensor**, shown below, is immoveable. If your printer has this sensor, proceed to 'Loading Media' (Section 2.4).

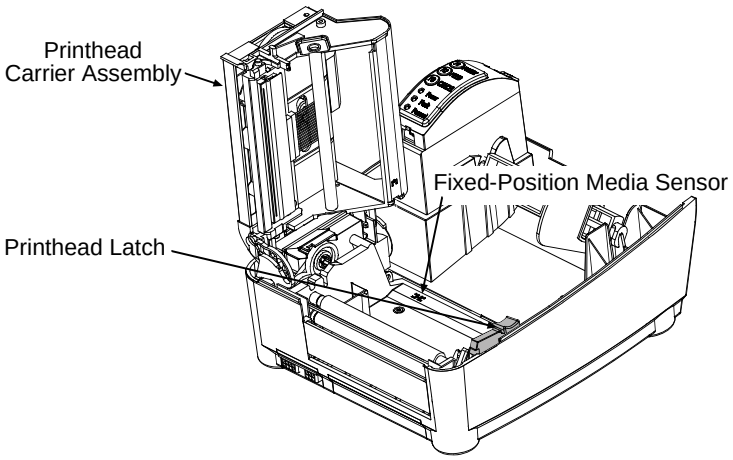

The **Adjustable Media Sensor** (AMS), shown below, may need to be positioned as described in section 2.3.1.

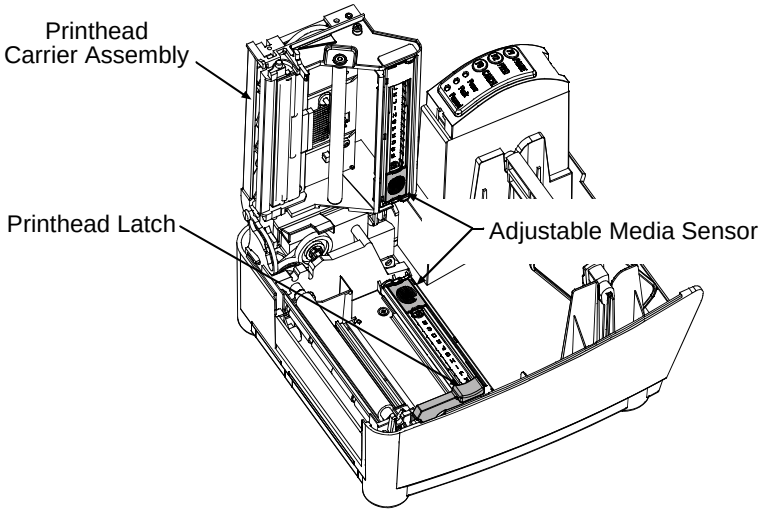

2.3.1 AMS Adjustment

For the proper detection of media and the label top of form (TOF), the table below indicates suggested AMS positions for various media types.

Adjustable Media Sensor Position		
Media Type	**Suggested Sensor Placement**	**TOF Sensing Used**
Continuous*	Near the center of the media	Continuous
Die-cut	Near the center of the label	Gap
Notched	Near the center of the notch	Gap
Reflective	Near the center of the black mark	Reflective

**The printer must be configured to use continuous media, see Section 3.4.*

To properly position the AMS, you will need to know where the TOF mark is located on your media. (For more information on media, see Appendix A - Specifications.)

Depending of your media type, take a measurement from the left-justified media edge across to the center of the TOF mark as suggested in the table above. The following example illustrates the measurement of notched media.

Reflective marks are placed on the underside of the media.

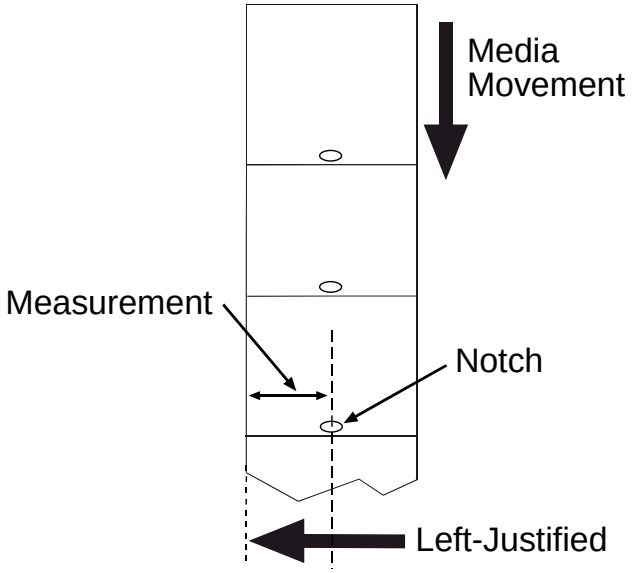

To simplify the adjustment, the AMS uses Reference Letter designators that correspond to the following TOF mark distances:

Reference Letter	Distance of the TOF Mark from the Media Edge	
	(inches)	(millimeters)
A	.180	4.6
B	.500	12.7
C	.750	19.1
D	1.00	25.4
E	1.25	31.8
F	1.50	38.1
G	1.75	44.5
H	2.00	50.8
I	2.25	57.2
J	2.50	63.5
K	2.75	69.9
L	3.00	76.2

Position the Adjustable Media Sensor as follows:

1. Based on the measurement made earlier, choose the Reference Letter that best corresponds to the location of your TOF mark.

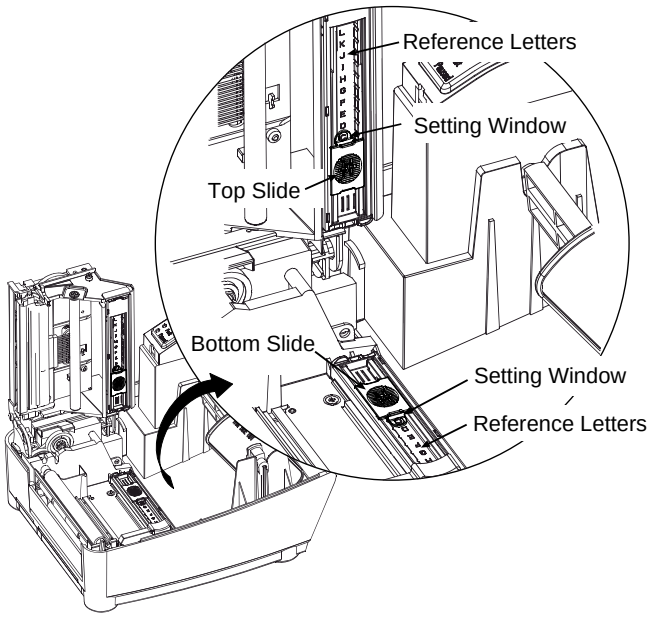

2. Use a finger to move the Bottom Slide until your selected Reference Letter appears in the Setting Window of the slide.

3. Use a finger to move the Top Slide until your selected Reference Letter appears in the Setting Window of the slide.

> ☑ The Top and Bottom Slides must be positioned over the same Reference Letter for proper media sensor function.

4. Proceed to 'Loading Media' (Section 2.4).

2.4 Loading Media

Load media into the printer as follows:

1. With the Cover open and the Printhead Carrier Assembly raised, remove the Media Hub and insert it through the Roll Media (with the labels spilling forward).

2. Place the Media Hub Flange (with its smooth side toward the media) onto the Media Hub.

3. Place the Media Hub, flange, and media onto the Standoffs in the printer.

4. Route the media through the printer, as shown.

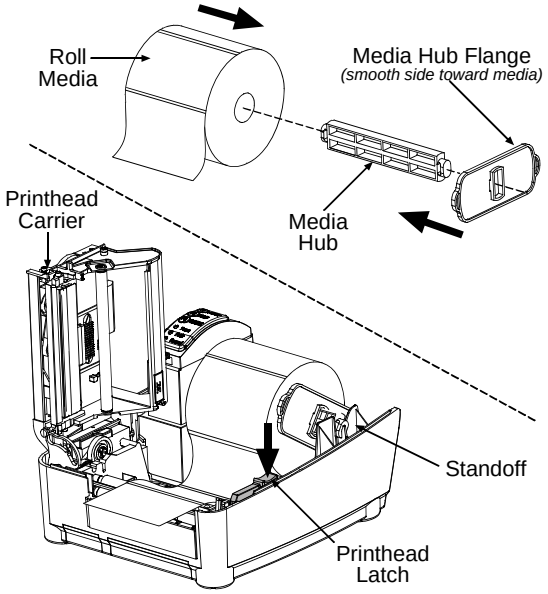

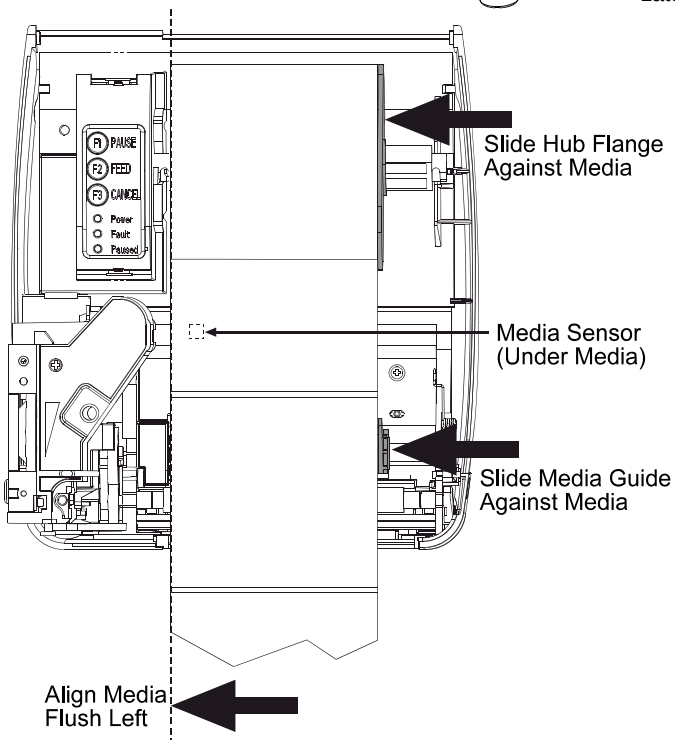

5. Slide the Media Guide and Media Hub Flange to the edge of the media.

6. Close the Printhead Carrier Assembly and press down until it locks into place.

7. Close the cover and press the (F2) button several times to position the media and ensure proper tracking. (If the printer does not correctly sense the top of each label, as denoted by the FAULT Light, it may be necessary to perform the Calibration Procedure, Section 3.7.).

> ☑ The printer is factory set to use 4-inch media (and ribbon, if thermal transfer equipped). When using a different media width, refer to Chapter 4 for additional printer adjustments.

2.4.1 Loading Media for Optional Peel Configuration

When using the Peel Mechanism do not exceed print speeds of 4 inches per second.

1. Open the cover.
2. Push the Printhead Latch down and raise the Printhead Carrier Assembly.
3. Place a roll of media (labels facing up) on the Media Hub and insert them into the printer. Slide the Media Hub Flange with its smooth side towards media onto the Media Hub.
4. Pull the Peel Lever forward to the 'Open' position.
5. Remove 6 (152 mm) of labels from the backing. Route the Media Backing over the Platen and Peel Bar and behind the Peel Roller and Fascia as shown below.

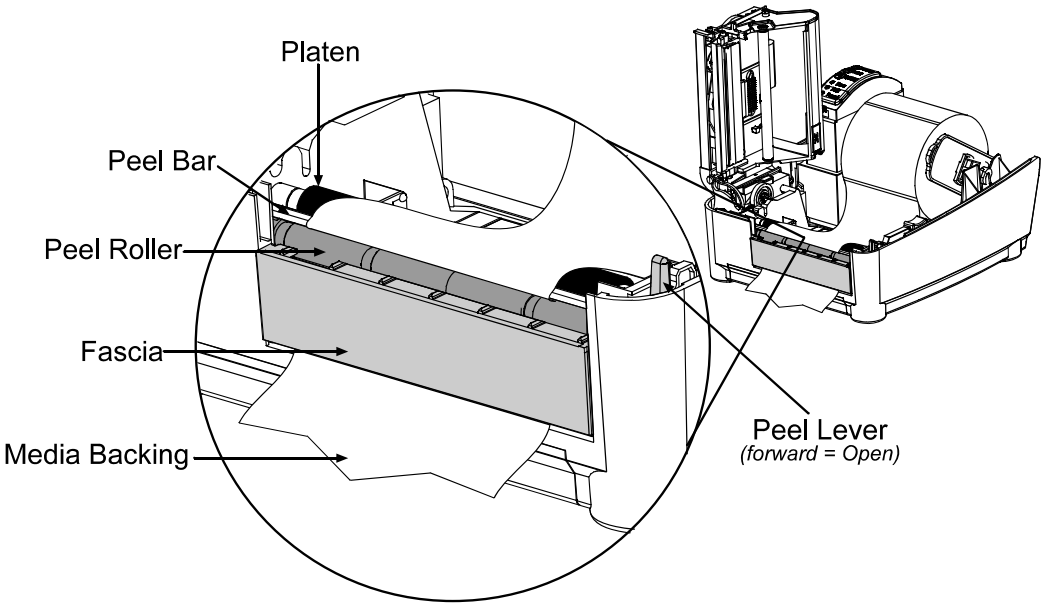

6. Push the Peel Lever back to the 'Closed' position.
7. Close the Printhead Carrier Assembly and press down until it locks into place.
8. Close the cover and press the F2 button several times to advance the media and ensure proper tracking. The labels will separate automatically as it is fed through the printer. (If the printer does not correctly sense the top of each label, as denoted by the FAULT Light, it may be necessary to perform the Calibration Procedure, Section 3.7.)

2.5 Loading Ribbon

Ribbon is required with thermal transfer media. If your printer is equipped with the thermal transfer option and if you will be using thermal transfer media, load ribbon as follows:

1. Open the cover.

2. Remove both Ribbon Hubs.

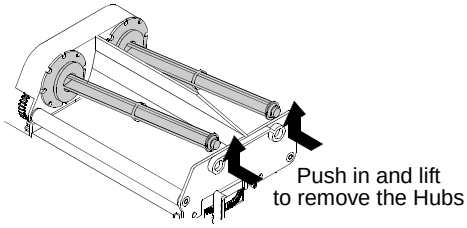

3. Slide a roll of Ribbon onto one of the Ribbon Hubs and an Empty Core onto the other hub.

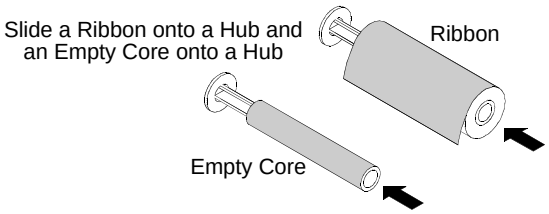

4. Push the Printhead Latch down and raise the Printhead Carrier Assembly.

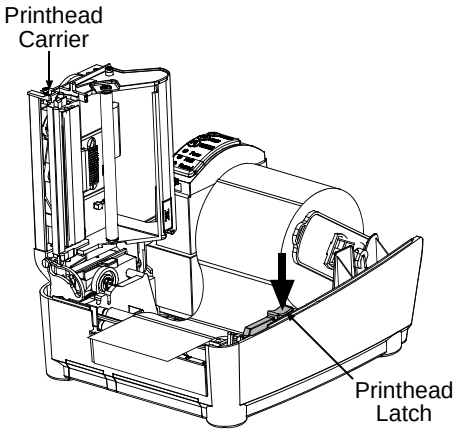

5. Place the Ribbon Hubs back into the printer and route the ribbon through the Printhead Carrier Assembly as shown below, then close the Printhead Carrier.

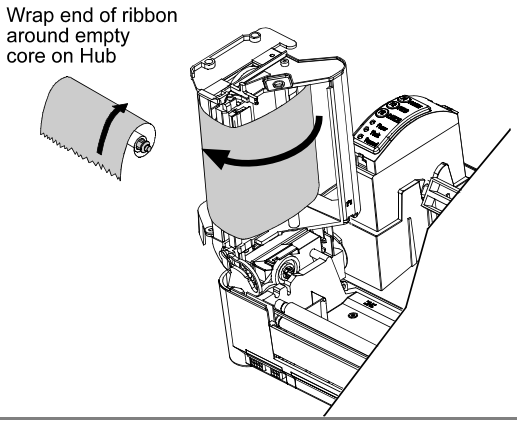

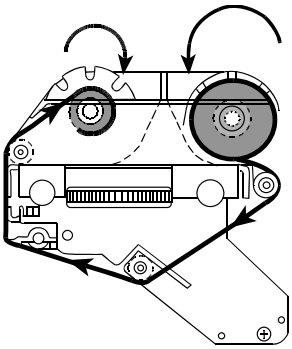

Right Side View

Ensure the inked side of the ribbon faces the media and NOT the printhead.

7. The 'Media Type' setting within the printer's setup must be set to 'Thermal Transfer' to print using a ribbon. See Section 3.4.

3 Printer Operation

3.1 Introduction

The Front Panel consists of three indicator lights and three function buttons. The functions of these lights and controls are listed in the following sections.

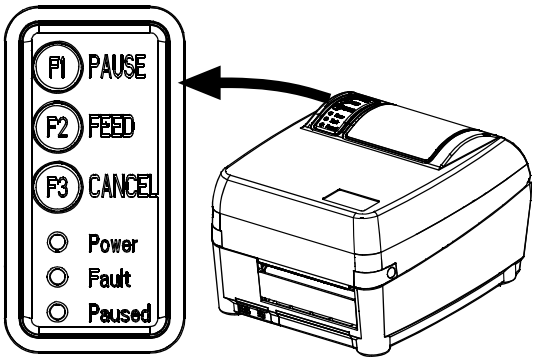

3.2 Lights

(Normal power-up)

Normal Mode

- ○ Power — *Indicates the printer is on*
- ○ Fault — *Indicates a top of form or mechanical error has occurred*
- ○ Paused — ***Solid On:*** *Indicates the printer is in the 'Paused' state*

  Blinking: *Indicates the printer is receiving data from the host*

☑ All three lights will be on during power-up initialization and a warm reset.

3.3 Buttons

The three buttons, F1, F2, and F3 perform different functions based on the printer's operational mode.

Ready Mode Functions

These functions can be performed at any time when the printer is at idle.

Function	Button(s)	Description
Pause	F1	Pauses and un-pauses the printer
Feed / Clear Fault	F2	Feeds one label or clears fault condition
Cancel	F3	Cancels the current batch of labels. Press the Pause button to print the next batch of labels in the printers buffer.
Soft Reset	Press and Hold F1 + F3	Resets the printer
Print Test Label	F1 + F2	Prints the Test Label
Print Configuration Label	F2 + F3	Produces Database Configuration and Test Label
Print Ethernet Label	F1 + F2 + F3	Prints the printers Ethernet configuration
Quick Calibration	Press and Hold F2	Performs a "Quick Calibration", see section 3.7.1
Empty Calibration	Press and Hold F1 + F2	Performs a "Empty Calibration", see section 3.7.2

Delayed Power-up Functions

Turn on the printer, when the three lights turn on press and hold the button sequence. Continue to hold the button(s) until the three lights turn off.

Function	Button(s)	Description
Hex Dump	Press and Hold F2	Enters Hex Dump Mode, see section 3.8.3
Level 1 Reset	Press and Hold F1 + F3	Resets the printer to a saved configuration file.
Level 2 Reset	Press and Hold F1 + F2 + F3	Resets the printer to the default factory settings.

3.4 Printer Configuration Tools

The printer contains many user adjustable parameters. These parameters are configurable using a few methods. The table below lists the most popular ways of configuring the printer and the pros and cons of each. Choose the method that best addresses your application.

Method	Description	Pros	Cons	For More Info
DMXConfig Program*	DMXConfig (located on the Accessories CD-ROM) is a Windows based configuration utility that allows the user to make changes to the existing printer setup via a direct connection to the host computer's serial, USB, or parallel connection.	Easy to use, gives the user the most control of the printer.	Software must be installed on a Windows based host computer.	See Section 3.5
Internal Web Pages*	Internal web pages are simple HTML pages that can be accessed with any web browser via the optional Ethernet port.	Easy to use. Printer can be configured from any host connected to the network regardless of physical location or host operating system. No additional software required.	Printer must be equipped with an Ethernet option. Depending on the complexity of the network, initial connection may not be possible until network parameters are set via another method.	See Appendix C.3
Windows Driver	The Windows printer driver (located on the Accessories CD-ROM).	Many applications require use of driver for printing from 3rd party applications. This can be an all in one solution for some users that do not require advanced setups.	Requires installation of a driver on a Windows based host. Only basics parameters can be configured.	See Section 3.6
Internal Menu System	Internal menu system that uses the printers front panel buttons to navigate to desired printer settings. Since the printer is not equipped with a display, feedback is printed directly on the label stock.	No host or software required.	Complicated procedure. Requires loading of label and ribbon (if equipped).	See Appendix B
DPL Programming Commands	DPL Programming Language commands can be built into custom label formats or sent individually to the printer.	DPL commands can be built directly into label formats which can configure the printer on the fly.	DPL programming knowledge needed.	See the Class Series Programmer's Manual

** Recommended methods*

3.5 Printer Configuration Utility (DMXConfig)

DMXConfig (located on the Accessories CD-ROM) is a windows based configuration utility that allows the user to make changes to the existing printer setup via a direct connection to the host computer's serial, USB, or parallel connection.

DMXConfig Features:

- Allows Real-Time Control/Query of Printer Configuration
- Define and Save Optimal Configurations for Applications
- Saved Configurations can be Shared with other Printers and Sent via Email
- Download Files, Formats and Fonts
- Query Memory Modules

Be sure to use the DMXConfig utility located on the Accessories CD-Rom that is included with your printer. Older versions might not operate correctly with some printers. For the latest version please visit our web site at www.datamax-oneil.com.

A new feature of DMXConfig allows the use of Datamax-O'Neil Windows Driver for bi-directional communications and configuration. Before this feature can be used, a small setting change must be made to the printer driver's properties.

Right-click on the printer driver icon and select "Properties". Click on the "Advanced" Tab and select "Print directly to the printer", then Click "OK".

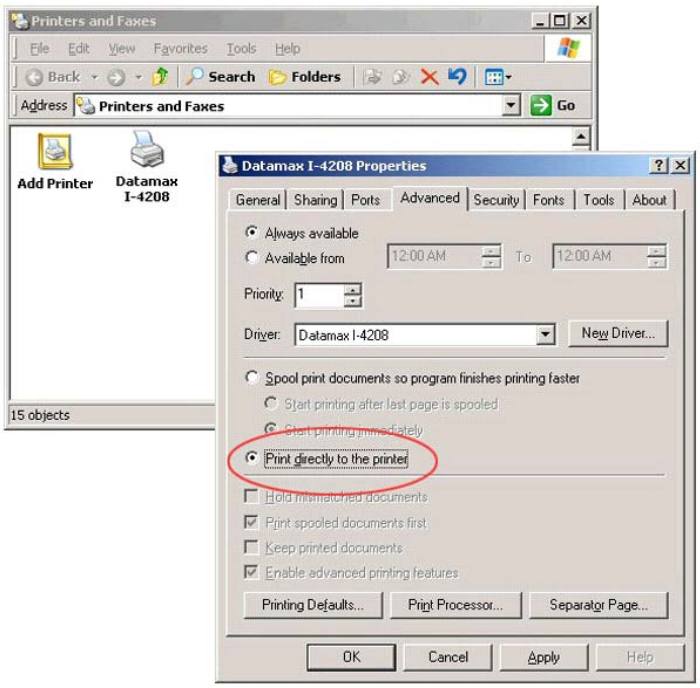

Once you have installed the DMXConfig utility:

1. Connect the host to the printer with a serial or parallel cable.

2. Turn on the printer.

3. Launch the DMXConfig utility.

4. Query the printer by using the 'Query Printer' toolbar button (top-left). This will connect to the printer and get the current printer settings.

5. At this point you may browse the tabs and make any changes necessary to the printer configuration. Once complete, send the new settings to the printer using the 'Configure Printer' toolbar button. The example below illustrates changing the Media Type setting to "Thermal Transfer.

6. Select the 'Media Settings' tab, in the 'Media Type' drop-down box select 'Thermal Transfer'.

7. Send the settings to the printer using the 'Configure Printer' toolbar button.

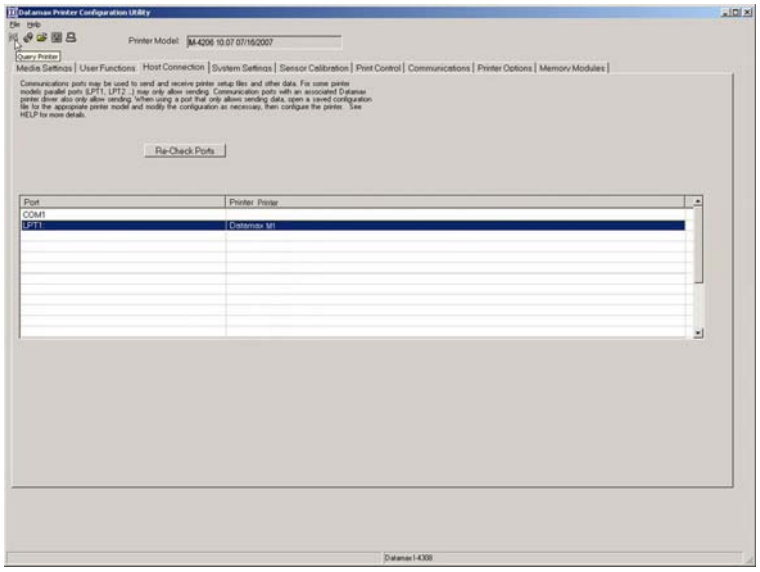

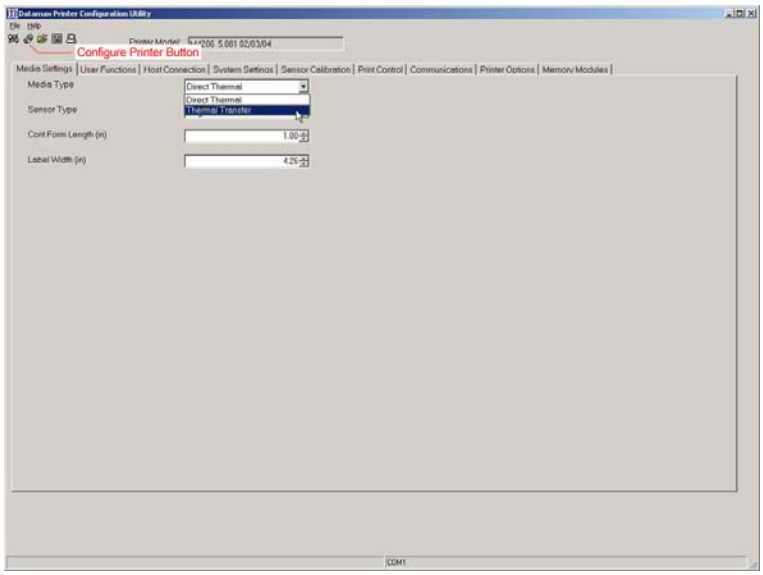

The printer is now configured to 'Thermal Transfer'. You may close the DMXConfig utility and begin printing using ribbon.

Other parameters can be changed using this procedure as well.

3.6 Windows Driver

The Windows driver is located on the Accessories CD-Rom included with your printer. For the latest version please visit our web site at www.datamax-oneil.com.

Installing the Windows Driver:

Place the Accessories CD-Rom included with your printer into your computers CD-Rom drive.

Once the CD-Rom starts, select "Install Windows Driver" from the main menu and follow the instructions on the screen to install.

When prompted, select your printer from the list, (i.e. Datamax E-4xxx). Continue to follow the on-screen instructions to install the driver.

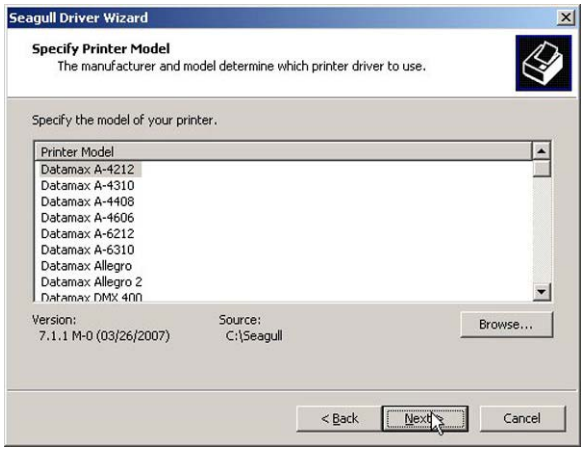

Important Notes:

The Windows driver functions the same as any other Windows printer. A built in help file is available for complete information on all settings, however there are some important settings that should be observed for trouble free printing.

Page Setup Tab: Stock

It is important that the Stock setting matches the size of the label you are using. If you cannot find a match for your label click 'New' and enter the dimensions of your label.

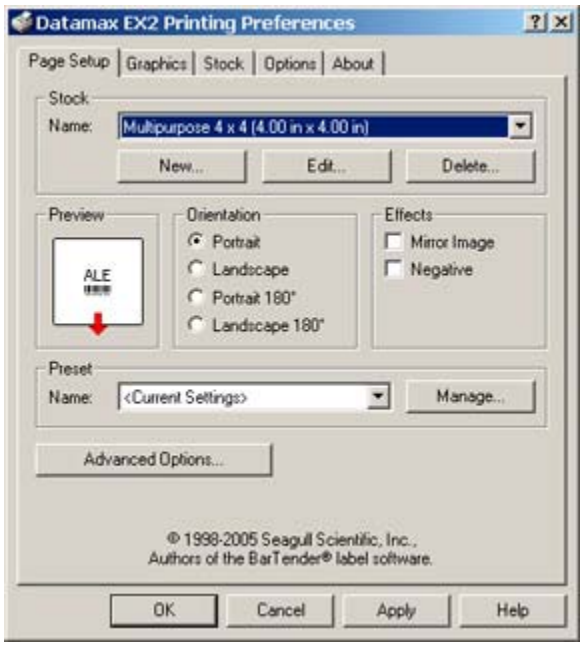

Options Tab: Print Speed & Printhead Temperature

These two settings will have the greatest effect on print quality. Some label stocks will require more heat and slower print speeds to generate a quality image.

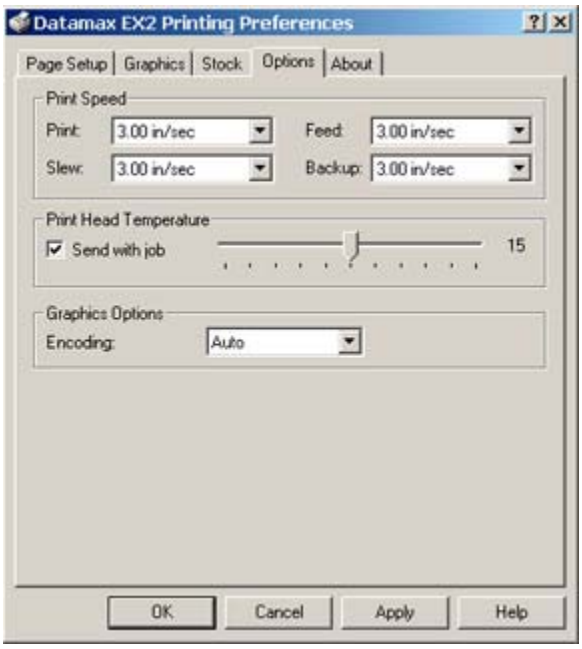

The Windows application software used to create the label format will likely have a "Page Setup" screen. This will also need to match the size of the label you are using.

3.7 Media Calibration

3.7.1 Quick Calibration

Quick Calibration should be performed as part of the media loading routine to fine-tune the sensing parameters.

(1) This calibration is not necessary when using continuous stock.

(2) Media containing large gaps may require a change in the PAPER OUT DISTANCE before proceeding.

Calibrate the printer as follows:

1. Ensure that the printer is ON and in an idle state (i.e., not off-line) with media loaded, the media sensor adjusted, and the sensor type selected.

2. Press and hold the F2 button until one label has been output then release. Wait for the printer to process the data. There are two possible outcomes:

   Upon completion, one of the following lights will flash five times to denote the result of the auto calibration attempt:

   POWER light = Successful calibration.

   FAULT light = Unsuccessful calibration, try again. If the calibration continues to fail proceed to Section 3.7.3.

3.7.2 Empty Calibration

Empty Calibration calibrates the printer's media sensor to detect an 'Out of Stock' condition. Calibrate the printer as follows:

1. Ensure that the printer is ON and in an idle state with media removed.

2. Press and hold the F1 + F2 buttons for a few seconds.

3.7.3 Standard Calibration

The Standard Calibration can be performed using the DMXConfig Utility, *(see section 3.5 for more information on DMXConfig)* or using the front panel buttons *(see Appendix B for more information).*

Once you have installed the DMXConfig utility and the printer is properly loaded with media:

1. Connect the host to the printer with a serial or parallel cable.

2. Turn on the printer.

3. Launch the DMXConfig utility.

4. Query the printer by using the 'Query Printer' toolbar button (top-left). This will connect to the printer and get the current printer settings.

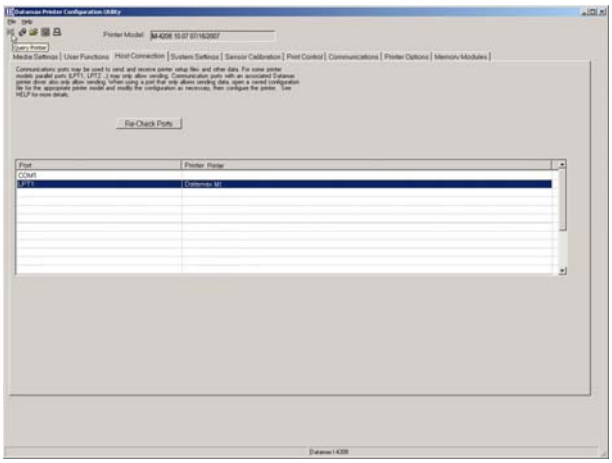

5. Select the "Sensor Calibration" Tab and then click the "Media Calibration Wizard" button. When prompted click "OK" to start the calibration wizard.

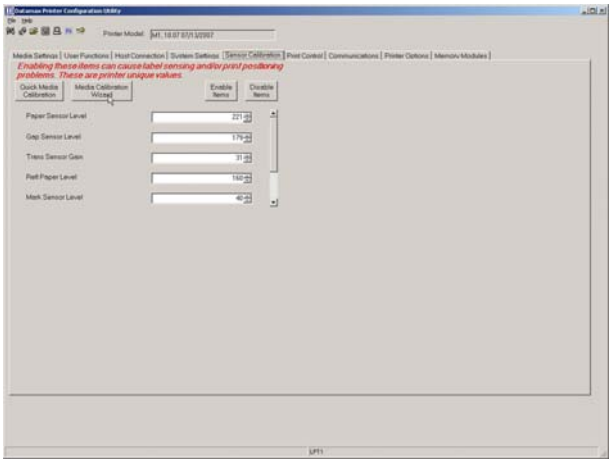

6. The Calibration Wizard will now prompt you to 'Load Stock'. Be sure the media is properly loaded in the printer. Close the printhead and click "OK".

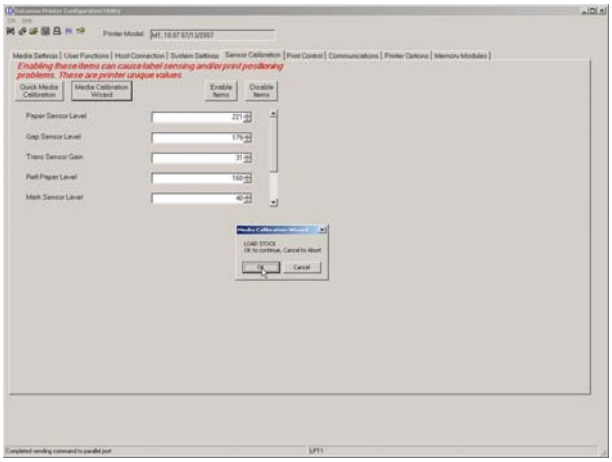

7. The Calibration Wizard will now prompt you to 'Load Backing'. Peel off a few labels and position the backing material in the media sensor. Close the printhead and click "OK".

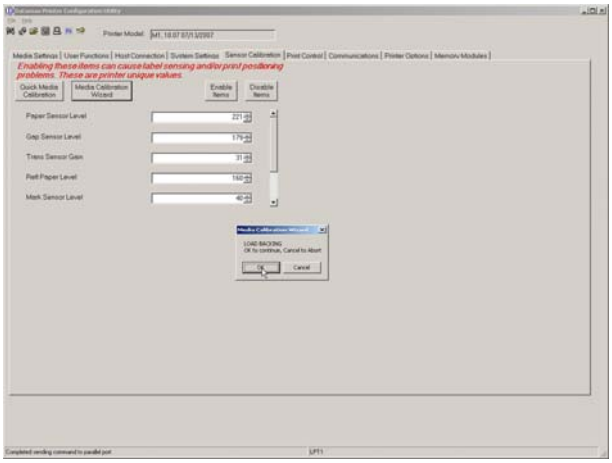

8. The Calibration Wizard will now prompt you to 'Remove Stock'. Remove all media and backing from the printer. Close the printhead and click "OK".

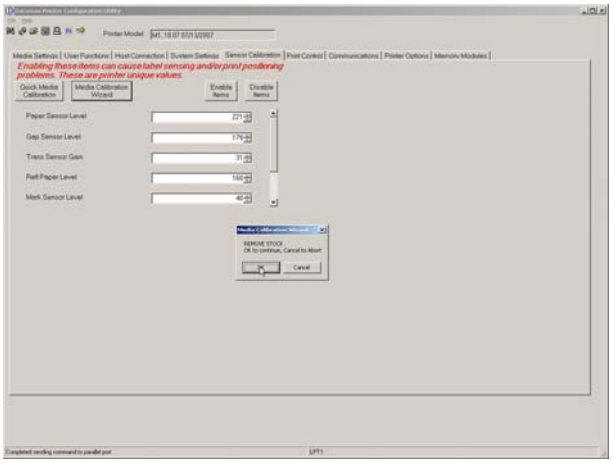

9. The Calibration Wizard will now respond with 'Passed Calibration', click "OK" Re-install the media in the printer. Close the printhead and press the (F2) button to test the calibration. Each press of the (F2) button labels should feed one label.

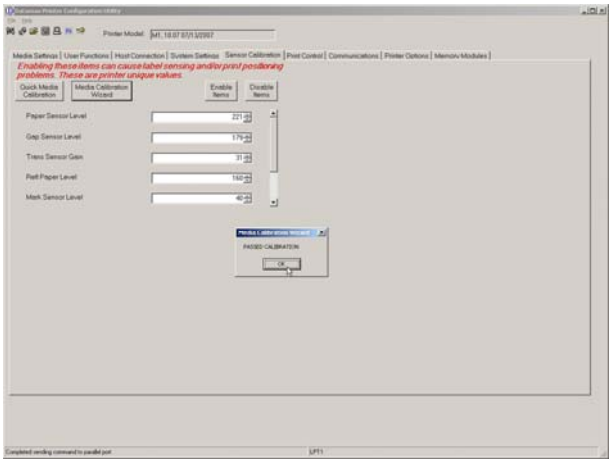

If the printer was unsuccessful in calibrating. Retry the procedure beginning at Step 5.

3.8 Internal Labels

The following section details the printer's resident labels.

3.8.1 Database Configuration Label

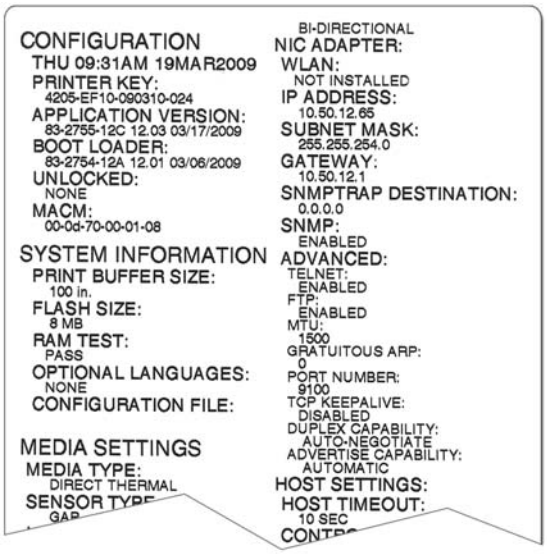

To print the Database Configuration Label, proceed as follows:

With the printer on, loaded with media (at least 4 inches wide) and ribbon (if printing with thermal transfer media), press the F2 + F3 buttons simultaneously.

3.8.2 Test Label

The Test Label is used to evaluate the current printer setup for print quality, label tracking, and print positioning.

To print the Test Label, proceed as follows:

With the printer loaded with media (at least 4 inches wide), and ribbon (if printing with thermal transfer media), simultaneously press the F1 + F2 buttons.

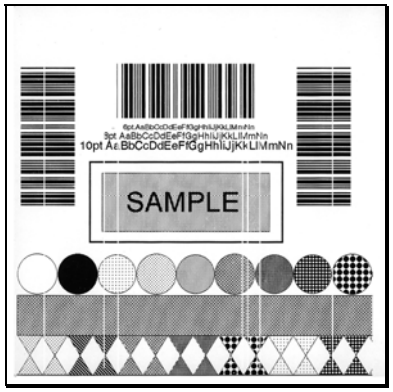

Faulty Test Label:

Instead of consistent patterns, streaks in the direction of print indicate a dirty or faulty printhead. See section 4.3 for cleaning instructions.

3.8.3 Hex Dump Label

The Hex Dump Label is a useful tool in the diagnosis of problems including communications handshaking and DPL syntax errors. To generate a Hex Dump Label the printer enters into Hex Dump Mode. In this mode, all data sent to the printer will be immediately output in hexadecimal code, along with the printable ASCII equivalents. To decode this information, the *Class Series Programmer's Manual* is an essential reference. As a final note, many software programs use bit mapping to construct the label, making diagnosis of this data difficult. Contact Datamax-O'Neil Technical Support with any questions.

To enter Hex Dump Mode and print a Hex Dump Label, proceed as follows:

With the printer off, loaded with media (at least 4 inches wide) and ribbon (if printing with thermal transfer media), press and hold the F2 button while turning the printer on. Continue holding the F2 button until the PAUSED Light turns off. Now, all data received by the printer will be output in hexadecimal code, as shown below.

```
0000  02 4C 0D 44 31 31 0D 31  ^L.D11.1
0008  36 31 31 30 30 30 30 33  61100003
0010  32 30 30 30 31 30 46 4F  200010FO
0018  4E 54 20 36 3A 20 41 4C  NT 6: AL
0020  4C 20 56 41 4C 49 44 20  L VALID
0028  20 20 20 20 20 20 20 20
0030  20 20 20 0D 31 36 31 31      .1611
0038  30 30 30 30 32 38 30 30  00002800
0040  30 31 30 20 20 20 20 20  010
0048  20 20 20 43 48 41 52 41     CHARA
0050  43 54 45 52 53 3A 0D 31  CTERS:.1
0058  36 31 31 30 30 30 30 32  61100002
0060  34 30 30 30 31 30 23 24  400010#$
0068  25 26 28 29 2A 2B 2E 2D  %&()*+.-
```

To exit the Hex Dump Mode, turn the printer off.

4 Maintenance and Adjustments

4.0 Introduction

This section details the cleaning, adjusting, and troubleshooting tips for the printer. The following table outlines the recommended maintenance schedule for the various printer parts.

Area	Method	Interval
Printhead	Turn off the printer before cleaning the printhead. Use solvent* on a cotton swab to clean the printhead from end to end.	After every roll of media.
Platen Roller	Turn the power off. Rotate the platen roller and clean it thoroughly with solvent* and a cotton swab.	After every roll of media.
Peel-Off Roller	Rotate the peel-off roller and clean it thoroughly with solvent* and a cotton swab.	After every roll of media.
Media Path	Solvent*	After every roll of media.
Peel/Tear Bar	Solvent*	As needed
Media Sensor	Blown air or brush	Monthly
Exterior	Mild detergent or desktop cleaner.	As needed
Interior	Brush or vacuum cleaner	As needed.

** It is recommended that a solvent containing isopropyl alcohol be used.*

Warning

Isopropyl alcohol is a flammable solvent; always take the proper precautions when using this substance.

4.1 Cleaning the Printhead

Warning

Never use a sharp, hard, or abrasive object on the printhead.

If print quality declines (symptoms can include unreadable bar codes or streaks through text and graphics), the typical cause is debris buildup on the printhead which, left unattended, can lead to premature dot failure. Depending upon the supplies and printing parameters used, different cleaning methods are recommended.

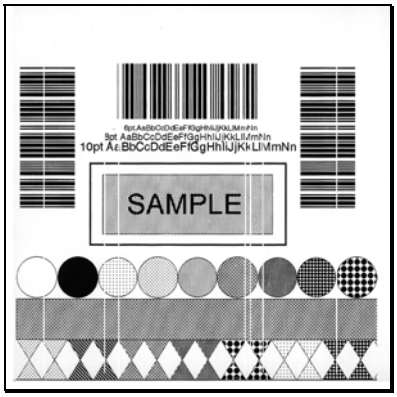

Streaks can indicate a dirty or faulty printhead.

Proper cleaning is critical. To maintain peak performance of the printer, Datamax-O'Neil offers a complete line of cleaning products including pens, cards, films and swabs. Visit our website at http://www.datamaxcorp.com/clean/ to learn more.

Cotton Swab Procedure (for users of direct thermal media, or thermal transfer media with wax ribbon):

1. Turn OFF the Power Switch and unplug the printer. Raise the cover, then raise the Printhead Assembly and **wait briefly for the printhead to cool.**

2. Remove media and ribbon. Using a Cotton Swab moistened (not soaked) with isopropyl alcohol, thoroughly clean the printhead.

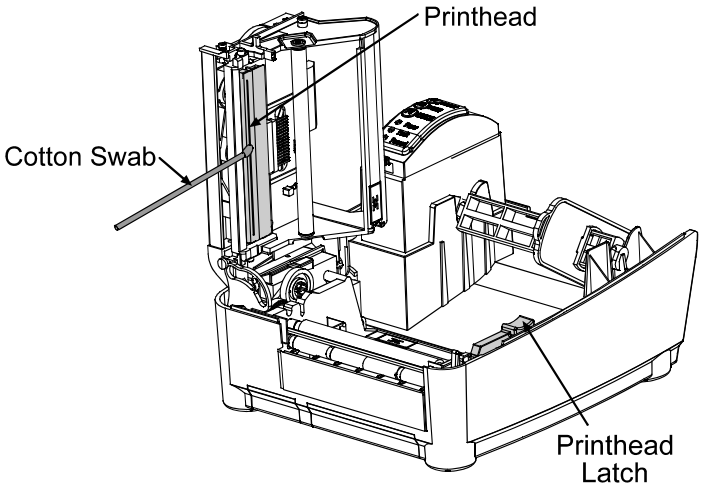

Cleaning Card Procedure (for users of direct thermal media, or thermal transfer media with wax/resin ribbon combinations; also for unsuccessful Cotton Swab cleaning attempts):

1. Raise the cover, then raise the Printhead Assembly and **wait briefly for the printhead to cool.**

2. Remove media and ribbon then place a Cleaning Card under the printhead. (Part number 70-2013-01 for 4-inch cards).

3. Close and latch the printhead. Turn the Media Width Thumbwheel counterclockwise as far as possible.

4. Close the cover then press (F2) button to initiate cleaning.

5. After the cleaning card has been run through the printer, reinstall media (and ribbon, if needed). Plug in and turn ON the printer. Run a few sample labels and examine them. If streaking is still present, use the Cleaning Film Procedure, below; otherwise, this completes cleaning.

Cleaning Film Procedure (for users of thermal transfer media and resin ribbon, when printing with a Heat Value of 22 or higher, or when other methods prove unsuccessful):

1. Raise the cover, then raise the Printhead Assembly and **wait briefly for the printhead to cool.**

2. Remove media and ribbon then place a sheet of Cleaning Film under the printhead. (Part number 70-2087-01 for 4-inch film).

3. Close and latch the printhead. Turn the Media Width Thumbwheel counterclockwise as far as possible.

4. Close the cover then press (F2) button to initiate cleaning.

5. After the cleaning film has been run through the printer, turn OFF the Power Switch and unplug the printer. Open the cover then raise the Printhead Assembly and **wait briefly for the printhead to cool.** Using a cotton swab moistened (not soaked) with isopropyl alcohol, clean the printhead then allow it to dry.

6. Reinstall media (and ribbon, if needed). Plug in and turn ON the printer. Run a few sample labels and examine them. If streaking is still present the printhead may need to be replaced; see Section 4.5.

4.2 Media Width Adjustment

A Thumbwheel on the side of the Printhead Carrier Assembly allows the printhead to be adjusted for various sizes of media. When adjusting for narrow media move the Thumbwheel to the left (clockwise); conversely, when adjusting for wide media move it to the right (counterclockwise).

The numbers on the Thumbwheel are for reference only and do not correspond to specific media widths.

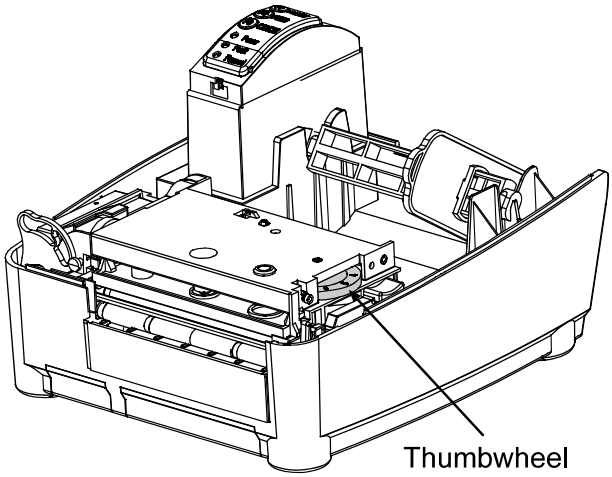

To perform a media width adjustment, proceed as follows:

1. Load media into the printer. Print a label (press the F1 + F2 buttons simultaneously) and examine it.
2. If the printing appears too light on the right-hand side of the label (see example below), then move the Thumbwheel counterclockwise. Print another label and examine it; make additional adjustments as necessary.

If the printing is light on the right side of a label, make a counterclockwise adjustment with the Thumbwheel.

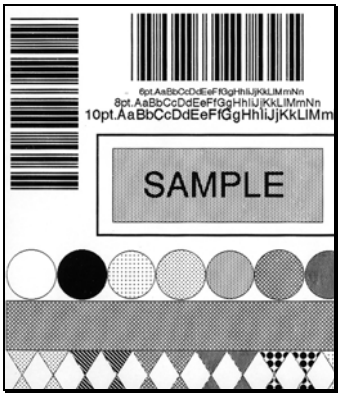

Direction of Media Movement

If the media begins tracking too far to the right while printing, the Thumbwheel should be adjusted to the clockwise.

4.3 Fine Printhead Adjustment

The Fine Printhead Adjustment Set Screw, located on top of the printhead carrier assembly, is used for adjusting print quality. This adjustment is set at the factory and should not need further adjustment; however, with the different types and thickness of media some re-adjustment may be necessary if print quality suffers.

If thermal transfer equipped, it is not necessary to remove the Ribbon Handler Assembly; an access hole through the assembly is provided.

To adjust the printhead, turn the Set Screw until optimum print quality is obtained (some trial and error may be necessary). Do not over tighten the Set Screw.

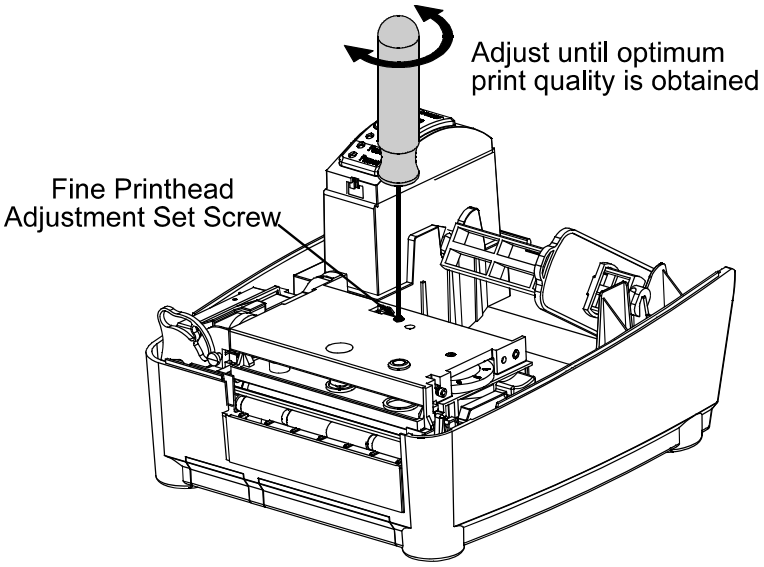

4.4 Printhead Replacement

Always follow proper Electro Static Discharge procedures when replacing the printhead.

If thermal transfer equipped, it is not necessary to remove the Ribbon Handler Assembly; an access hole is provided.

Remove the printhead as follows:

1. Turn off the printer.

2. Loosen the Printhead Screw until the printhead is freed.

3. Press the Printhead Latch then raise the carrier assembly.

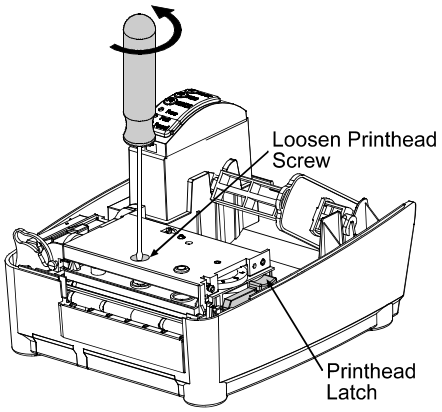

4. Remove the printhead cable from the back of the printhead.

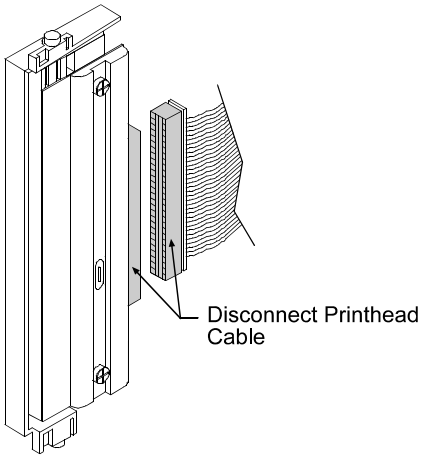

Replace the printhead as follows:

1. Connect the printhead cable to the new printhead.

2. Position the printhead in the printhead carrier assembly, ensure that the printhead cable is not pinched, and then tighten the Printhead Screw.

3. Clean the Printhead (see Section 4.1) and allow it to dry before use.

4.5 Downloading Firmware and Fonts

The operating programs and fonts for the printer are stored in Flash memory on the Main PCB. When program updates and/or new features are added, they can be downloaded to the printer as follows:

1. Identify the new version for your model of printer from the Datamax-O'Neil FTP site at ftp.datamax-oneil.com and download it onto your computer's hard drive or a floppy disk.

2. Ensure that the printer is connected to the host and that the power is 'On.' Using the DOS copy command enter:

```
copy filename.zg lpt1/b
```

> ☑ Other programs (e.g., hyper-terminal and certain Windows□ Driver programs) may also be used to download this file.

3. The PAUSED Light will flash during the download.

4. **Following a successful download**, the PAUSED Light will illuminate then the printer will perform a 'cold reset.' The previous printer setup will not be affected unless substantial firmware data structure changes have occurred. Print a Database Configuration Label to verify your new firmware version.

   Following an unsuccessful download, the FAULT Light will illuminate then the printer will perform a 'warm reset' (both the POWER and PAUSED Light will be on during power-up initialization). The original firmware will remain operational. If the printer fails to reset, toggle the power 'Off' and 'On.'

   Try re-sending the file to the printer. If the failure continues, check the following possible causes:

   - An invalid or corrupted file is being downloaded - Ensure the file being downloaded is correct and applicable for your printer model.
   - Possible communications error - Check the cable connection between the host and printer and ensure that a quality, shielded cable is used.
   - Possible Flash memory problem - Call for service.

If the printer fails to boot-up after an unsuccessful download, turn 'Off' the power. Simultaneously press and hold the (F1) + (F3) buttons while powering 'On' the printer. Now, try downloading the file to the printer again.

5 Troubleshooting

5.0 Introduction

Occasionally, situations arise that require troubleshooting. Possible problem situations and potential solutions are listed in this section. While not every situation is addressed, you may find some of these tips helpful. After the correction action is taken press the FEED button to clear the alarm. Contact a qualified service technician for problems that persist or are not covered in this section.

5.1 Troubleshooting Tips

The following section lists the symptoms and the associated page numbers of the topics covered in the troubleshooting section.

Unacceptable print quality:

- Dirty printhead: Clean the printhead (see Section 4.1).
- The temperature setting may be incorrect for the media being used: Use the software program or DPL commands adjust the Heat Setting and Print Speed.
- A mismatched incorrect ribbon/media combination is being used: Check the types being used.
- Faulty printhead: Replace it (see Section 4.4) or call for service.

The printer does not print or prints several labels at once:

- The labels are incorrectly loaded: See the loading instructions on the inside cover of the printer or Section 2.4.
- The media is not calibrated: Calibrate it (see Section 3.7).
- If equipped, the Adjustable Media Sensor may need to be repositioned (see Section 2.3.1).
- The media sensor or sensor circuitry may be defective: Call for service.

The ribbon does not advance (the paper advances, but ribbon does not):

- The ribbon may be installed incorrectly: Ensure that the ribbon's inked side faces the paper. With most ribbons this can be verified by rubbing paper against the ribbon; the ink should smudge the paper. Or, if using label stock, the sticky side of a label will pull off the ink.
- A mismatched ribbon/paper combination is resulting in an insufficient amount of friction between paper and ribbon: Ensure that the correct type of ribbon is being used with the media.

Skips every other label (print quality is good, but every other label is skipped):

- The label is formatted too close to the top edge of the label: Leave white space equal to 8-dot rows (about .02 inch [.5mm]) at the top of the label.
- The media is not calibrated: Calibrate it (see Section 3.7).
- If equipped, the Adjustable Media Sensor may need to be repositioned (see Section 2.3.1).
- The media sensor or media sensor circuitry may be defective: Call for service.

Unable to print in rotation 4:

- The characters are formatted outside the dimensions of the label: Check that the row/column values provide enough room for the height of the image being printed.

Prints light on the right side of the label:

- The media width adjustment is set for a narrower media width than is actually being used: Adjust for the media width (see Section 4.2).
- The printhead is not properly aligned: Call for service.
- The printhead carrier assembly is not latched down: Latch it.

Printer fails to power on:

- The AC wall outlet may be faulty: Try another outlet.
- A fuse may be blown: Call for service.
- The power supply may be faulty: Replace it.
- A defective power switch may exist on the printer: Call for service.

Label advances 1-2 inches before a fault indication:

- The ribbon may be incorrectly installed. Ensure that the ribbon's inked side faces the paper. With most ribbons this can be verified by rubbing paper against the ribbon; the ink should smudge the paper. Or, if using label stock, the sticky side of a label will pull off the ink.
- A mismatched ribbon/paper combination is resulting in an insufficient amount of friction between paper and ribbon: Ensure that the correct type of ribbon is being used with the media.

Label advances 16 inches before a fault indication:

- The media may not be properly loaded: Reload it (see Section 2.4). When loading media ensure that the media hub and media guide are against the media and that gaps or marks in the labels are in line with the media sensor.
- If equipped, the Adjustable Media Sensor may need to be repositioned (see Section 2.3.1).
- The media sensor or media sensor circuitry may be defective: Call for service.

Labels move excessively from side to side during printing:

- The media may not be properly loaded: Reload it (see Section 2.4). When loading media ensure that the media hub and media guide are against the media and that gaps or marks in the labels are in line with the media sensor.
- The media width adjustment may not be properly set: Readjust for the label width (see Section 4.2).

A Specifications

Mechanical

Width	8.77 inches (22.3 cm)
Depth	10.0 inches (25.4 cm)
Height	7.05 inches (17.9 cm)
Weight	5.2 pounds (2.4 kg)
Operating Temperature	40 to 95 F (4 to 35 C)
AC Input Voltage	Power Supply 105 VAC to 250 VAC / 50-60 Hz

Printing

Print Method	Direct Thermal; Thermal Transfer (optional)
Print Speed	E-4205e: 1 - 5 IPS (25.4 - 127 mm/s) E-4304e: 1 - 4 IPS (25.4 - 101.6 mm/s)
Resolution	E-4205e: 203 DPI (8 dots/mm) E-4304e: 300 DPI (11.8 dots/mm)
Tear Bar	Tear up
DRAM Memory	16MB
FLASH Memory	4MB

Media / Ribbon

Media Types	Roll-Fed, Die-Cut, Continuous, Fan-Fold
Max. Media Width	4.3 inches (109 mm)
Min. Media Width	0.75 inches (19 mm)
Max. Print Width	E-4205e: 4.25 inches (108 mm) E-4304e: 4.12 inches (106 mm)
Print Length Range	.375 – 100 inches (9.5-2540 mm); *min length of 1 .25 inches (31.8mm) with optional Cutter.*
Media Thickness Range	.0025 - .01 inches (.064 - .254 mm); *up to .007 inches (.117 mm) with optional Cutter;*
Media Supply Roll Capacity	5 inches (127.0 mm) O.D. on a 1 inch (25.4 mm) core
Ribbon Width Range	1.0 - 4.3 inches (25 - 110 mm)
Ribbon Roll Capacity	Matched to media: approx. 361 feet (110 m) long with a 1.5 inch (38 mm) O.D. on a .5 inch core

Communications

Interface	USB, RS-232 (DB-9), and Centronics Parallel
Baud Speed	600 to 38,400 bits per second (BPS)
Handshaking	Xon/Xoff, CTS, DTR
Parity	Even, Odd, or None
Stop Bits	1 or 2
Data Bits	7 or 8

Fonts

9 Bit Map Fonts; rotated 0, 90, 180, and 270 degrees.

Embedded Bar Codes

32 embedded barcodes, (see the programmers manual for a detailed listing).

Approved Media

To achieve optimum print quality and maximum printhead life, Datamax-O'Neil specifies the use of Datamax-O'Neil brand media and ribbons. These supplies are specially formulated for use in our printers; use of other supplies may affect the print quality, performance, and life of the printer or its components. For a current list of approved media and ribbons for use in direct thermal and thermal transfer applications, please contact a Media Representative at (407) 523-5650.

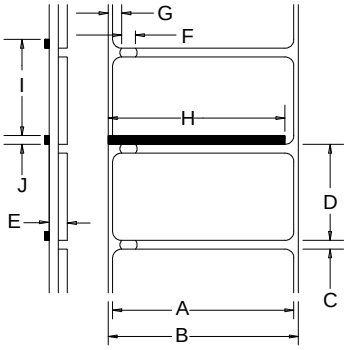

	Description	Max [1]	Min [1]
A	Label width	4.09	1.00
B	Backing width	4.30	1.00
C	Gap between labels	.25	.10
D	Label length	24[3]	.375[4]
E	Total thickness	.010[6]	.0025
F	Notch opening width	.50	.20
G	Distance from the edge of the media to the media sensor aperture (left justified)	.175	.125
	with the Adjustable Media Sensor option	2.94	.125
H	Reflective mark width[2]	4.10	.50
I	Distance between reflective marks	24[3]	.375[5]
J	Reflective mark length	.25	.10

[1] Units of measure are in inches.
[2] The reflective (black) mark must be carbon based, placed on the backside of the stock, and the reflectance shall be less than 10% at wavelengths of 950 and 640 nm.
[3] The label length may vary up to 99 inches with printable area not exceeding the maximum label length.
[4] This distance is inclusive of the minimum gap between labels. Min length of 1.25 inches (31.8mm) with optional Cutter installed.
[5] This distance is inclusive of the minimum reflective mark.
[6] .007 inches (.117 mm) w/Standard Cutter, .005 inches (.127 mm) w/LD Cutter

B Internal Menu

B.1 Buttons

The three buttons (PAUSE, FEED and CANCEL) perform different functions based on the printer's operational mode. The printer operates in one of the three following modes:

Normal: Normal printer functions. See Section 3.3.

Printer Setup: Allows changes to the printer's operational settings. See Section B.2.

Calibration: Allows the 'calibration' of the media being used for the correct sensing of the top of form. See Section B.4.

B.2 Printer Setup Mode - Button Functions

In 'Printer Setup' mode, the buttons control the operational settings of such items as media type, communications, and options as detailed below.

It is recommended that the Printer Setup Mode not be entered while in Peel Mode or with the optional Present Sensor enabled. Depending on label size, this can cause unpredictable results.

Printer and cutter faults are disabled during the Printer Setup Mode, but can still occur while printing "test" labels.

If at any time you wish to discard your changes and revert back to the previous values, simply turn off power to the printer.

If you wish to restore Factory Defaults Press and Hold F1 + F2 + F3

To change Printer Setup, proceed as follows:

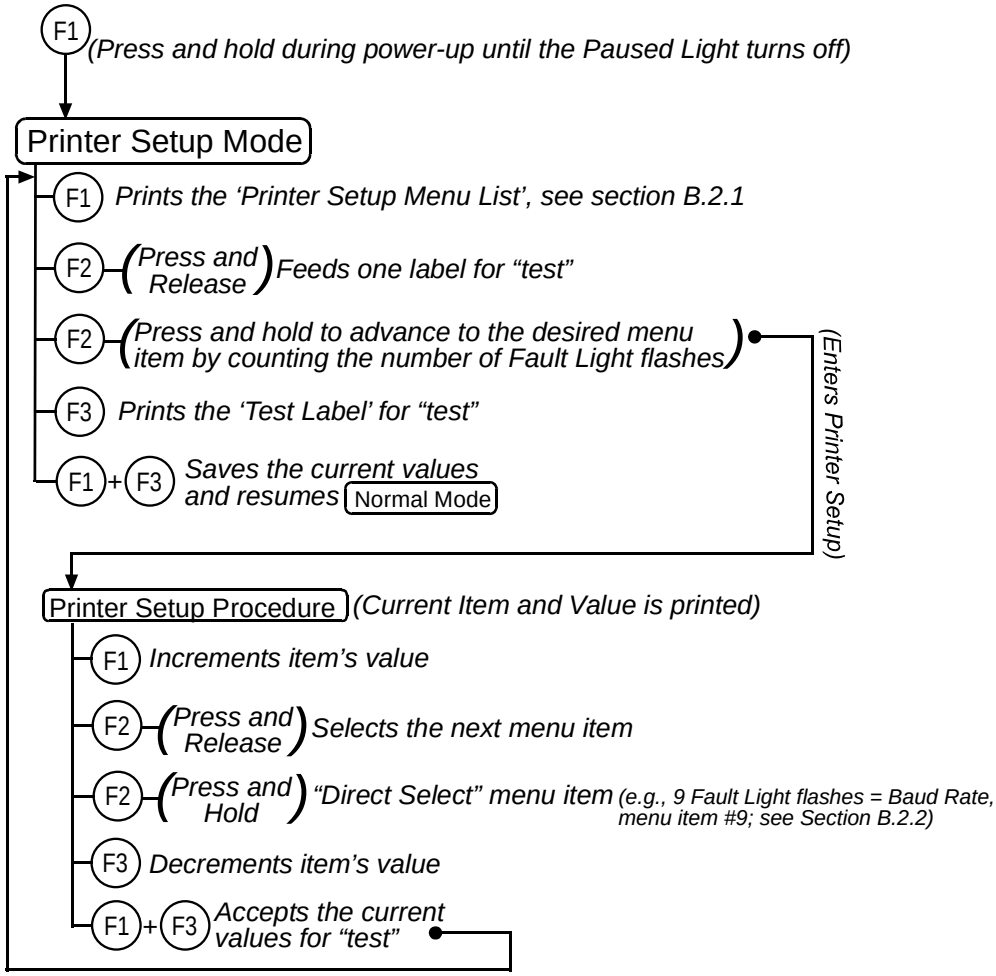

When adjusting CONT FORM LENGTH, LABEL WIDTH, or ALIGN LENGTH, momentarily pressing F1 or F2 will change the value by 1; and, holding either button down until the Fault light flashes will change the value by ten for each flash.

B.2.1 Printer Setup Menu List

The Printer Setup Menu List label, shown below, contains the printer's current values for each menu item that can be modified via the front panel (See Section B.2.2 for detailed item descriptions.)

The Menu Item Numbers correspond to the item's position in the Menu List for selection when pressing the F2 button during the Printer Setup Procedure. For example to "Direct Select" the BAUD RATE Menu Item press and hold the F2 button for 9 flashes of the FAULT Light or for the LABEL LENGTH item hold F2 for 12 flashes, etc.

Menu Item Numbers | Values | Menu Items

1)	DIRECT THERMAL	= MEDIA TYPE
2)	GAP	= SENSOR TYPE
3)	AUTO	= PRESENT SENSOR
4)	AUTO	= CUTTER
5)	IMPERIAL	=UNITS OF MEASURE
6)	0	= ROW ADJUST
7)	0	= COLUMN ADJUST
8)	0	= PRESENT ADJUST
9)	9600 BPS	= BAUD RATE bps
10)	8	= DATA BITS.
11)	STANDARD CODES	= CONTROL CODES
12)	100	= LABE LENGTH .01 in
13)	426	= LABEL WIDTH .01 in
14)	511	= SCALEABLE FONT CACHE 1KB
15)	1024	= INTERNAL MODULE
16)	AUTO	= PRESENT DISTANCE
17)	NO	= LABEL ALIGNMENT
18)	1	= ALIGNMENT LENGTH .01 in
19)	DPL	= INPIT MODE
20)	STANDARD	= DPL EMULATION
21)	10	= HEAT
22)	MULTIPLE LABEL	= IMAGING MODE
23)	STANDARD	= FAULT HANDLING
24)	ENABLED	= HEAT COMMAND
25)	ENABLED	= SPEED COMMANDS

When using narrow media, the 'Menu Items' column may be truncated.

B.2.2 Menu Items and Values

The table below details the Printer Setup Menu List items with a brief description of the item's function, and the possible values.

*** = Default Setting**

1) MEDIA TYPE	**2) SENSOR TYPE**	**3) PRESENT SENSOR**
Sets printing for direct thermal (no ribbon) or thermal transfer (ribbon) media. ***Possible Values:*** * DIRECT THERMAL THERMAL TRANSFER	Selects the sensor type used to detect the media's Top Of Form (TOF) mark. ***Possible Values:*** * EDGE: gap / notch TOF marks REFL (Reflective): black marks CONT (Continuous): no TOF marks	Enables/Disables the optional Present Sensor feature. ***Possible Values:*** * AUTO NO YES

4) CUTTER	**5) UNITS OF MEASURE**	**6) ROW ADJUST**
Enables/Disables the optional Media Cutter feature. ***Possible Values:*** * AUTO NO YES	Sets the printer to interpret measurements as metric or imperial values. ***Possible Values:*** * Imperial Metric	Shifts the vertical start of print position (in xxx dots). ***Possible Values:*** Range: 0 – 255; nominal = *128 (0 = close to edge; 255 = farthest from edge)

7) COLUMN ADJUST	**8) PRESENT ADJUST**	**9) BAUD RATE**
Shifts the horizontal start of print position (in xxx dots). ***Possible Values:*** Range: 0 – 255; nominal = *128 (0 = close to edge; 255 = farthest from edge)	Specifies an additional amount to feed the label after printing. ***Possible Values:*** Range: 0 – 255; nominal = *128 (0 = close to edge; 255 = farthest from edge)	Sets the serial port baud rate. (Must match the host setting). ***Possible Values:*** 600 to 38.4k; default = *9600 BPS

10) DATA BITS	**11) CONTROL CODES**	**12) LABEL LENGTH**
Sets the serial data word length (Must match the host setting). ***Possible Values:*** * 8 7	Allows code selection listed in Programmer's manual. ***Possible Values:*** * (STD) Standard Codes (ALT) Alternate Codes	Sets the page (label) size when the 'SENSOR TYPE' is set to continuous media. ***Possible Values:*** Range: 0 – 9999; default = *100 (Units = .01 inch)

13) LABEL WIDTH	14) SCALABLE FONT	15) INTERNAL MODULE
Sets the label width. ***Possible Values:*** Range: 75 – 426; default = *426 (Units = .01 inch)	Sets the number of memory blocks to allocate for scalable fonts. ***Possible Values:*** Range: 0 – 128; default = *64 (Units = 4K Bytes)	Sets the number of memory blocks to allocate for the internal RAM module. ***Possible Values:*** Range: 0 – 128; default = *128 (Units = 4K Bytes)

16) PRESENT DISTANCE	17) LABEL ALIGNMENT	18) ALIGNMENT LENGTH
Sets label stopping (and in certain cases the starting) location for different printer configurations. ***Possible Values:*** AUTO (Automatically sets the stop location. Installed options will be 'auto-sensed' and the appropriate stop position will automatically be set. Host commands are ignored.) *HOST (Sets stop position according to options installed. If no options are installed the printer sets stop location to the next label's start of print. Host commands will override.)	Sets the label alignment method. ***Possible Values:*** YES (user manually determines 'ALIGN LENGTH') AUTO (printer determines 'ALIGN LENGTH') *NO (no Label Alignment used)	Leading edge distance of two successive labels. Must be entered if 'LABEL ALIGNMENT' is set to Yes *(see Section B.3)*. ***Possible Values:*** 0 – 999; default =100* (Units = .01 inch)

19) INPUT MODE	20) DPL EMULATION
Selects between the standard or template interpretation of incoming data. ***Possible Values:*** * DPL (printer constructs the label using the standard DPL commands) LINE (printer constructs the label using a preloaded template form)	This instructs the firmware to process specific DPL data (Start of Print, DPI, and Imaging function) according to the selected printer emulation. ***Possible Values:*** * STANDARD ALLEGRO (Allegro Emulation) P PLUS (Prodigy Plus Emulation) PRODIGY (Prodigy Emulation)

21) HEAT	22) IMAGING MODE
Controls the 'burn-time' of the printhead. This is the equivalent of Heat Setting on most label software programs. ***Possible Values:*** Range: 0 – 30; default = *10	This command instructs the printer whether to pre-image the label format: ***Possible Values:*** * Multiple label (The printer images multiple labels as memory permits, achieving the fastest throughput; however, if time stamping, the time will reflect the moment the label is imaged rather than when actually printed.) Single label (The printer images the next label only after the previous label has been successfully printed. Single processing provides time-stamps that are more accurate, but it slows label throughput time.)

23) FAULT HANDLING	24) HEAT COMMANDS
When a fault condtions is detected, printing stops and the ERROR light turns on. After the problem is corrected, the FEED Key must be pressed to clear the fault. The label in process is *not* reprinted. ***Possible Values:*** YES or NO; default = *NO *(NO = NO REPRINT" disabled, reprinting will occur.)*	This command causes the printer to ignore DPL Heat commands; instead, the Heat value is controlled via the menu setting. ***Possible Values:*** * ENABLED DISABLED

25) SPEED COMMANDS

This command causes the printer to ignore DPL speed commands; instead, speed values are controlled via the menu setting.

Possible Values:

* ENABLED
DISABLED

All of the menu items listed in the previous section are stored in non-volatile memory.

B.2.3 Step by Step Modification of the Printer Setup

The following is an example of Printer Setup modification. Although this example will detail how to modify the serial Baud Rate, the same method can be used to change any of the printer's menu item settings.

> It is recommended that the Printer Setup Mode not be entered while in Peel Mode or with the optional Present Sensor enabled. Depending on label size this can cause unpredictable results.

1. With printer 'Off' and properly loaded with media, press and hold the F1 button while powering 'On' the printer. Continue to hold the button until the PAUSED Light turns off, then release it.
2. Press and hold the F2 button and count 9 flashes of the FAULT Light, then release it. The following printout should be produced:

```
9)    9600          BAUD RATE, bps
-----------------------------------------
```

3. Press the F2 button one time to increment to the 19200 bps value. The following printout should be produced:

```
9)    19200         BAUD RATE, bps
9)    9600          BAUD RATE, bps
-----------------------------------------
```

4. At this point you will accept the current values for "test" and exit the Printer Setup Procedure by simultaneously and briefly pressing the F1 + F3 buttons. Wait until the PAUSED Light goes off.

> If you wish to discard your changes and revert back to the previous values simply turn off power to the printer before Step 5.

5. Now you can save your changes and resume Normal Mode by simultaneously and briefly pressing the F1 + F3 buttons. Wait until the PAUSED Light goes off.
6. To confirm that your changes have been made press the F2 + F3 buttons simultaneously, this will print the Database Configuration Label. The label should show the new Baud Rate value of 19200.

B.3 Label Alignment

The Label Alignment function is intended for use when the label length is less than the distance between the printhead and the media sensor or where label waste at power-up is a concern. Label Alignment (see table below) is not recommended for label lengths greater than 6.5 inches or for media containing 2 or more form lengths.

Label Stock	Label Alignment Setting
Continuous	NO
6.5 inches or less	YES or AUTO
6.5 inches or more	NO
Multiple length labels	NO

The Label Alignment function is chosen via the menu system or by host commands. The three possible modes, YES, AUTO, and NO, are detailed in the following sections.

B.3.1 Label Alignment = YES

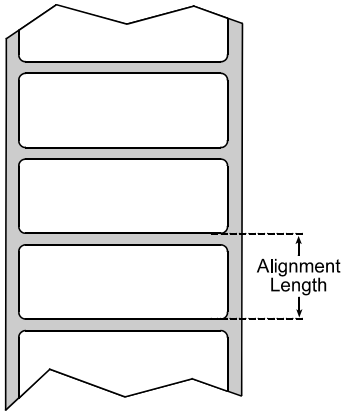

In this mode, the operator must supply an 'ALIGN LENGTH' value. This value must be physically measured from leading edge to leading edge of two successive labels, as shown. The measurement must be as accurate as possible. For very short labels, errors as small as 0.01" can result in noticeable print variations on the labels located between the media sensor and the printhead.

The measured value must be sent to the printer via the host computer or entered using the Printer Setup Mode (see Section B.2).

Then, in Normal Mode, press and hold the (F2) button (about 4 seconds). The printer will align the label to the top of form position.

If media with a different label length is subsequently loaded, the 'ALIGN LENGTH' must be recalculated and re-entered.

B.3.2 Label Alignment = AUTO

In this mode, the printer automatically calculates the 'ALIGN LENGTH' thus eliminating the need to physically measure the label. This mode is usually preferred in applications that require frequent media changes to labels of different lengths.

To perform an Auto Alignment, in Normal Mode press and hold the FEED button (about 4 seconds). The printer will feed labels to calculate the label length. Following the calculation, the printer will save the measurement and align to the top of form position. Auto Alignment can result in wasted labels during the measurement process (the longer the label length the greater the waste).

Special Case Auto Alignment when the Present Sensor enabled -

If the printer is equipped with the Present Sensor option and that feature is enabled, while the label length is being calculated the printer will pause and illuminate the PAUSE Light after each movement. You must press the Pause Button for the alignment to continue. This allows you to remove any labels as required; however, labels should not be forcibly removed since they may not actually be positioned for removal but only at an interim position required for measurement.

B.3.3 Label Alignment = NO

When Label Alignment is not enabled (i.e., set to NO), printing begins at the current label position without alignment, assuming the label is at the start of print position. Additionally, if the label length is short, labels between the printhead and the media sensor may be unused.

B.3.4 Label Alignment Troubleshooting

If you experience label alignment problems, the following table offers possible causes and solutions.

Problem	Possible Cause	Solution
Attempting to perform Label Alignment results in no paper movement.	With the Present Sensor enabled, Label Alignment cannot be performed without a Label Length.	▪ Set Label Alignment to AUTO, press and hold FEED until media moves for the automatic length measurement. ***~OR~*** ▪ Re-measure the Label Alignment Length. Use Printer Setup mode to enter the new length. Print a Database Configuration label to ensure the new length has been set.
First label is wasted during alignment. All labels thereafter print to the correct start of print position.	Alignment Length is too long. ***~OR~*** For labels whose length and stop position cause them to stop between labels on the media sensor, the alignment function can result in wasted labels.	▪ Set Label Alignment to AUTO, press and hold FEED until paper moves for automatic Label Alignment length measurement. ***~OR~*** ▪ Re-measure Label Alignment Length, use Menu Setup to set new length, ensure desired length has been set. ▪ Obtain a slightly different label Alignment Length measurement. Using the Label Alignment AUTO mode, hold the FEED button to force an alignment and label measurement. Ensuring slack in the label stock may result in a slightly different measurement. The Alignment Length may also be set manually via the Setup Menu. Increasing or decreasing the value by 1 or 2 units (in./100) may help to prevent the wasted labels; however, this may result in incorrect print positions for labels that are short in length.
Label Alignment is incorrect. Pressing FEED successively results in a short label length, one-inch.	Label Alignment Length is not correct. The default Label Alignment Length is 1.00”, and will result in this behavior when any larger label length is used without setting the appropriate length.	▪ Set Label Alignment to AUTO. Press and hold FEED until paper moves for automatic Label Alignment Length measurement. ***~OR~*** ▪ Measure the label length and use the Setup Menu to set the new length. Print a Database Configuration label to ensure the new length has been set.
Label Alignment is incorrect. Pressing FEED successively results in a label length longer than actual, one-inch.	Label Alignment Length is not correct. The default Label Alignment Length is 1.00”, and will result in this behavior when any larger label length is used without setting the appropriate length	▪ Set Label Alignment to AUTO. Press and hold FEED until paper moves for automatic Label Alignment length measurement. ***~OR~*** ▪ Measure the label length and use the Setup Menu to set the new length. Print a Database Configuration label to ensure the new length has been set.

Problem	Possible Cause	Solution
Tear Mode is selected but the label stop position (present position) is not far enough forward.	Another present position has been determined. Enabling the Present Sensor causes the label stop position (present position) to be approximately 0.1" behind the peel bar. ***~OR~*** The Present Adjust value is not correct.	▪ Disable the Present Sensor. ***~OR~*** ▪ Ensure the host computer is not providing a Present Distance shorter than is required for the Tear Bar. ▪ Use the Setup Menu to modify the Present Adjust value.
Tear Mode is selected but the label stop position (present position) is too far forward.	Another present position has been determined. ***~OR~*** The Present Adjust value is not correct.	▪ Ensure the host computer is not providing a Present Distance longer than is required for the Tear Bar. ▪ Use the Setup Menu to modify the Present Adjust value.
The FAULT Indicator illuminates during label alignment.	The label supply is empty	▪ Load media.

B.4 Calibration Mode – Button Functions

In 'Calibration' mode, the buttons allow the printer to adjust to the media being used. Calibration can be performed either automatically or manually, as detailed below.

Before calibrating, ensure that the Printhead Carrier Assembly is latched down, that the cover is closed, and that the media sensor has been set for the appropriate media type.

Printer and cutter faults are disabled during the Calibration mode, but can still occur while printing "test" labels.

If at any time you wish to discard your changes and revert back to the previous calibration simply turn off power to the printer.

To perform Calibration:

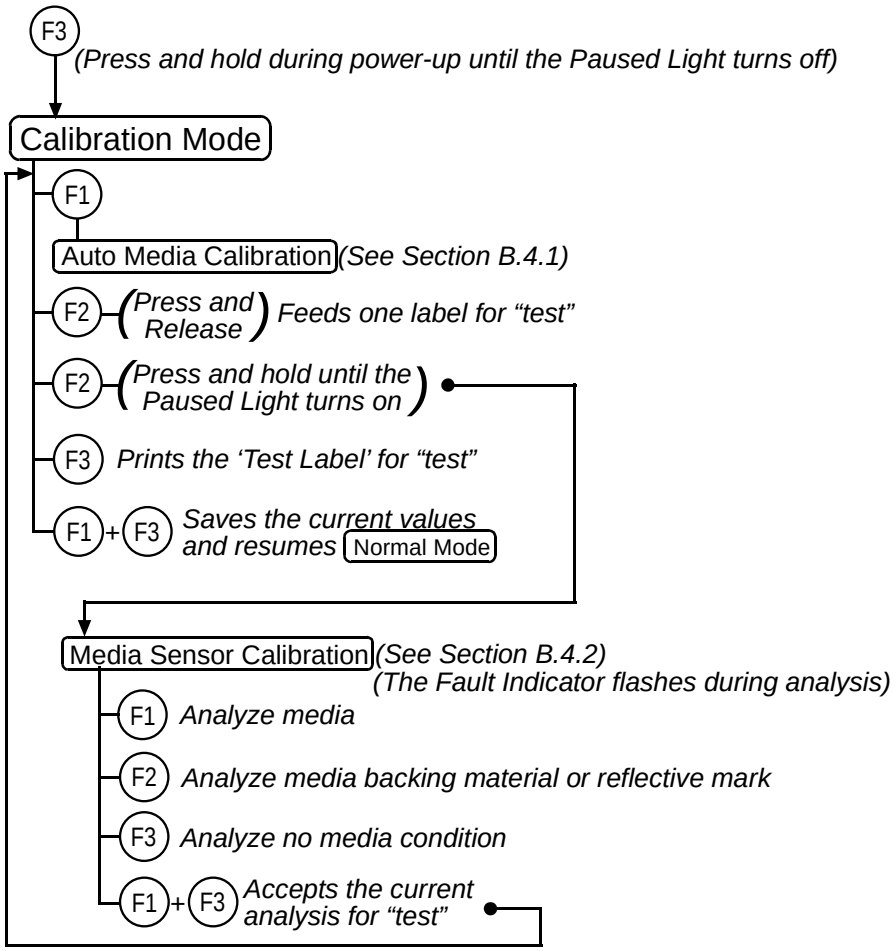

B.4.1 Auto Media Sensor Calibration

Auto Media Sensor Calibration automatically establishes the optimum sensing values for the media you are using in the printer.

> ☑ Before calibrating, be sure the media sensor is set for the appropriate media type; also, ensure that the Printhead Carrier Assembly is latched down and the cover is closed.

To automatically calibrate the media sensor, proceed as follows:

1. With the desired media loaded, hold the (F3) button while powering up the printer. Continue to hold the button until the PAUSED Light turns off then release it.

2. Next press the (F1) button. *The printer will feed approximately ten inches of media to calculate the TOF Delta and Low values to be used.*

3. Upon completion, one of the following Indicators will flash five times to denote the result of the auto calibration attempt:

   PAUSED Light = Successful calibration. Proceed to Step 5.

   FAULT Light = Unsuccessful calibration. Proceed to Section B.4.2.

> ☑ If you wish to discard the changes and revert back to the previous calibration simply turn off the printer before Step 5.

4. Now save the changes and resume Normal mode by pressing the (F1) + (F3) buttons simultaneously. Wait until the PAUSED Light goes off before printing.

B.4.2 Manual Media Sensor Calibration

The Manual Media Sensor Calibration procedure should be used in cases where the printer continues to suffer from media sensing problems after performing or attempting to perform the Auto Media Sensor Calibration.

> ✓ Before calibrating, be sure the media sensor is set for the appropriate media type; also, ensure that the Printhead Carrier Assembly is latched down and the cover is closed.

To manually calibrate the media sensor, proceed as follows:

1. Hold the F3 button and power-up the printer. Continue to hold the button until the PAUSED Light turns off; then release the button. Next, press and hold the F2 button, continue to hold the button until the PAUSED Light turns on; then release the button.

2. Place the media with the backing attached (if any) over the media sensor (see Section 2.3 for the sensor's location), close the Printhead Carrier Assembly, and then press the F1 button. *The printer will flash the FAULT Light as it analyzes the material.*

3. Position the backing material or the black (reflective) mark over the media sensor, close the Printhead Carrier Assembly, and then press the F2 button. *The printer will flash the FAULT Light as it analyzes the top of form mark.*

4. Remove all the material from the media sensor, close the Printhead Carrier Assembly, and then press the F3 button. *The printer will flash the FAULT Light as it analyzes the no media condition.*

5. Simultaneously and briefly press the F1 + F3 buttons to accept the calibration for "test" and exit the Media Sensor Calibration. One of the following Indicators will flash five times to denote the result of the manual calibration attempt:

   PAUSED Light = Successful calibration. Proceed to Step 6.

   FAULT Light = Unsuccessful calibration. Retry the procedure beginning at Step 1.

6. Use the F2 button (feeds a label), and the F3 button (prints a test label) to test the current calibration.

> ✓ If you wish to discard the changes and revert back to the previous calibration simply turn off the printer before Step 7.

7. Now save the changes and resume Normal Mode by pressing the F1 + F3 buttons simultaneously and briefly. Wait until the PAUSED Light goes off.

C Ethernet Setup

C.1 Network Card Reset

It is recommended that the printer's communication settings be reset to factory defaults to avoid any conflicts in configuration. To reset the printer's communication settings:

Turn on the printer, when the three LEDs turn on press and hold the F2 + F3 buttons. Continue to hold these buttons until all three lights turn off.

C.2 Network Card Setup

The Print Server makes IP requests at power-up, so before making a network connection to the printer consider how your IP addressing needs to be assigned. The IP addressing of the Internal Ethernet Print Server can be configured in one of two ways: Using a static IP Address or Using IP Discovery (DHCP, BootP, or RARP). **At factory default settings IP DISCOVERY is Enabled and the Wireless module is Disabled.**

1. With Printer Off, connect the network cable then turn on Printer.

2. The printer will now search for a DHCP server. Allow up to 90 seconds for the printer to retrieve an IP address.

3. At this point it is recommended to print a Network Report. This Network Report is generated by the printer and lists important default information such as the IP and MAC Addresses as well as SSID for wireless equipped cards. To print the 'Network Report':

   Press the F1 + F2 + F3 buttons at the same time.

4. Verify the printer has obtained a valid IP address for your network. If a valid IP address was not obtained or you wish to use a different static address, see section ***C.5 DMX Config Utility.***


NETWORK REPORT
CURRENT PRINTER INFO
MACO: 00:0D:70:0B:31:90
IP ADDRESS: 192.168.10.26
SUBNET MASK: 255.255.255.0
GATEWAY: 192.168.10.26
DHCP: *ENABLED
SNMP: *ENABLED
PORT NUMBER: 9100
NETBIOS NAME: DMX_0B3190
WLAN MODULE - DISABLED -
MODULE FW VERSION: 4.3.0.24
RADIO FW VERSION: 1.1.1.111.8.4.0.145
PORT STATUS: CONNECTED: ESS
SSID: 000b2802d55e
MACR: 00:0B:28:02:D5:5E
BSS ADDRESS: PROVIDED BY DHCP

The information on this label will vary depending on your configuration and firmware version.

Once the previous steps have been successfully completed you may now use the IP Address to:

> Install a printer driver, and start printing from your Windows applications. See section, ***C.6 Installing the Printer Driver.***

-or-

> If your printer is equipped with wireless capabilities, see section ***C.3 Network Card Setup - Wireless*** for setup.

-or-

> Browse to the printer's internal web pages for advanced configuration. See section, ***C.4 Printer's Internal Web Pages.***

C.3 Network Card Setup - Wireless (Infrastructure Mode)

After a successful setup is made via a wired connection, the Wireless connection (if equipped) can now be configured in infrastructure mode using an static or DHCP issued IP address.

1. Open your web browser. Type in the IP Address of the printer. The Default IP is: 192.168.10.26.

> ☑ *Note:* If you have assigned different IP Address to the printer, make sure to enter the correct IP Address.

2. The page to the right will appear:

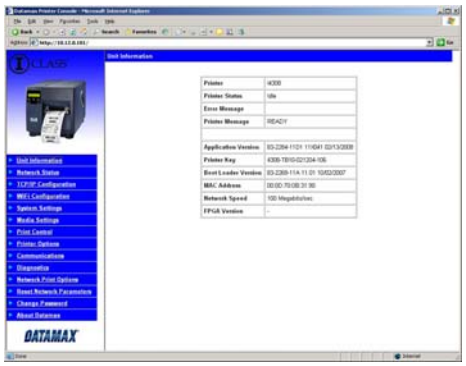

3. Click on the WiFi Configuration menu item. Locate and set the following items:

   > Set the SSID field to match the SSID of your access point.
   > Set WLAN Network Type drop down box to "Infrastructure".
   > Set any WLAN Security Settings if necessary.

   For static IP setup:

   > Set the "Static BSS Address". This is the address assigned to the radio portion of the network card, it must be an unique address.

   Scroll down to the bottom of the page, enter the password (default is "sysadm") and click apply.

4. Click on the TCPIP Configuration menu item. Locate and set the following items:

   > Activate the "Enable Wireless" setting by clicking on the check box.

   For static IP setup:

   > Enter valid static IP addresses for "IP Address", "Subnet Mask", and "Default Gateway"

   > Un-check the "Enable IP Discovery" check box.

   Scroll down to the bottom of the page, enter the password (default is "sysadm") and click apply.

5. Click on the Reset Network Parameters menu item, enter the password and click Reset.

Once the previous steps have been successfully completed you may now use the IP Address to:

> Install a printer driver, and start printing from your Windows applications. See section, ***C.6 Installing the Printer Driver.***

-or-

> Browse to the printer's internal web pages for advanced configuration. See section, ***C.4 Printer's Internal Web Pages.***

C.4 Printer's Internal Web Pages

1. Open your web browser. Type in the IP Address of the printer. The Default IP is: 192.168.10.26.

> ☑ ***Note:*** If you have assigned different IP Address to the printer, make sure to enter the correct IP Address.

2. The following page will appear:

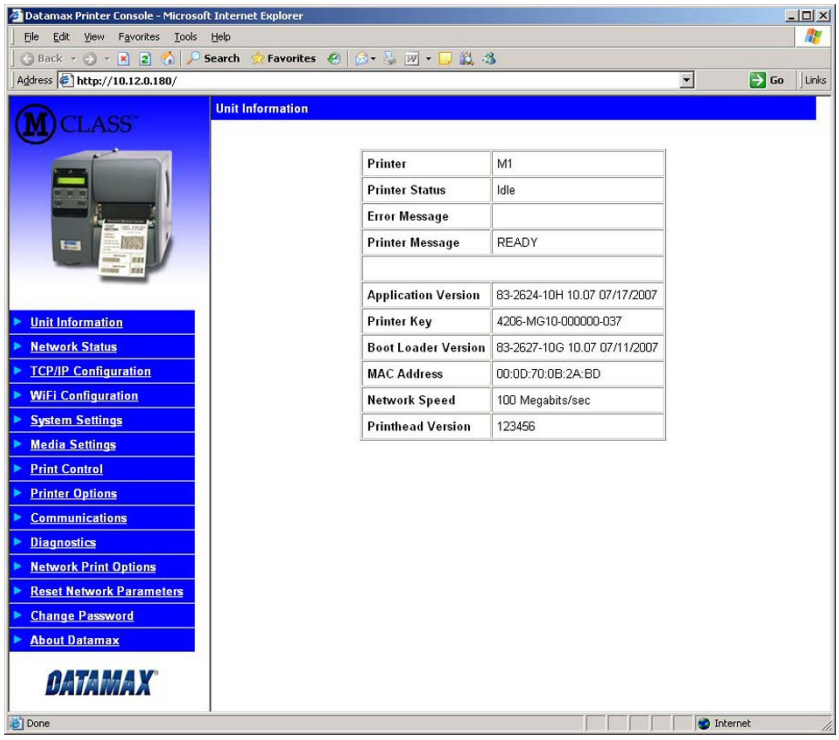

The printer's internal web pages are divided into 14 pages that are accessible via the navigation bar on the left-hand side.

The **TCP / IP Configuration** and **WiFi Configuration** pages contain many items associated with the setup of the network card as well as wireless security settings. The following tables provide information on each of the items listed on these pages.

> ☑ ***Note:*** You must provide a password to change any settings, the default password is "**sysadm**".

> ☑ ***Note:*** After changes are sent to the printer, (on all web pages) the printer must be reset in order for the changes to take effect. This can be done from the "Reset Network Parameters" web page.

> ☑ ***Note:*** If any address parameters were changed such as IP address, subnet or gateway, the printer might not be viewable from the current host if they are no longer on the same subnet.

TCP / IP Configuration Page

Static IP Settings	
IP Address	These are the static address the printer will use when "IP Discovery" is set to disabled or a valid IP could not be retrieved from a DHCP server.
Subnet Mask	
Default Gateway	

DHCP Settings	
Enable IP Discovery (DHCP, BOOTP, ect.)	Controls IP Address discovery, where: Checked: Broadcasts over the network to receive addresses from the responsible server at startup. Manual modifications to IP Address, Subnet Mask, or Gateway are not allowed; and, if no server is found, the specified static value will be used. Unchecked: Uses the stored static IP, Subnet Mask, and / or Gateway Address.

Network Services	
Enable SNMP Service	Allows management protocols, where: Sends messages to SNMP-compliant devices. Sends no messages.
Enable Telnet Service	Allows Telnet protocol to transfer data, where: Telnets to remote computers or server systems. Disables Telnet.
Enable FTP Service	Allows FTP protocol to transfer data, where: Enables FTP Disables FTP

Wireless Settings	
Enable Wireless	Enables or disables the Wireless communication (if equipped) of the network card.

Advanced Settings	
Port Number	Selects the Port to use for all network communications; Default is 9100
Max Transmission Units	Sets the Maximum Transmission Unit packet size, where: Packet size, in bytes. (512-65515); Default is 1500
Gratuitous ARP (Minutes) (0=disable)	Sets time interval for ARP transmission packets, where: (0-2048 minutes); Default is 0
Duplex Capability	Allows the User to specify the line duplex and speed of the wired Ethernet connection. Auto-Negotiate (default) 100 BaseT Full Duplex 100 BaseT Half Duplex 10 BaseT Full Duplex 10 BaseT Half Duplex
Advertise Capability	Selects the method in which the Duplex Capability setting is advertised, where: Automatic (advertises the selected Duplex Capability setting) All Capabilities (advertises all capabilities)
SNMP Trap Destination Address	Is the address in standard octet format where SNMP traps will be sent when SNMP service is installed on your receiver. When zeroed, no traps are sent.

NetBIOS (WINS) Settings	
NetBIOS Name	Is the name used to reference the printer instead of the IP address. A WINS or DNS server is required for this capability.
Primary WINS Server	The IP address of the primary WINS Server.
Secondary WINS Server	The IP address of a secondary WINS Server.
Primary DNS Server	The IP address of the primary DNS Server.
Secondary DNS Server	The IP address the secondary DNS Server.

Wifi Configuration Page

WLAN Network Settings	
SSID	Service Set Identifier that identifies the Module to connect to an AP. To make this connection, the Module and AP must have the same SSID. The SSID cannot contain spaces. Default setting is the MAC address of the wireless module.
WLAN Network Type	Specifies the type of network in which the Module will be used: Infrastructure = connects to WLAN using an AP. Ad Hoc = used to connect two peer-to-peer devices. Unique = resets card to Adhoc mode and uses the MAC address as the SSID (*default*)
Ad Hoc Mode Channel	When Wireless Network Type is Ad Hoc, selects the channel used for communication. The two peer-to-peer devices must use the same channel. Range is 1 to 14 channels. Default channel is 1.
Access Point Density	Specifies a rate that, if not sustainable with the current association, causes the Module to look for an AP with which it can maintain the specified rate. A high setting causes the Module to more readily switch to another AP. Low - 2 Mbps cannot be sustained. (*default*) Medium - 5.5 Mbps cannot be sustained. High - 11 Mbps cannot be sustained.
WLAN Region Code	***Module Operation Region*** Specifies the wireless channels allowed. This setting only applies when the Module is operating in Ad Hoc mode. The AP controls the channel used during Infrastructure mode. Default is US.

WLAN Security Settings	
Wireless Security Mode	**Configures the security settings.** **Disable = security is disabled. (*default*)** **wep64 = 64-bit key length (sometimes referred to as 40-bit)** **wep128 = 128-bit key length** **wpa-psk = WPA Pre-Shared Key** wpa-leap = WPA LEAP wpa-leap64 = Migration mode w/ Cipher suite TKIP+40 bit WEP using EAP(LEAP). *Requires LEAP username and password*. wpa-leap128 = Migration mode w/Cipher suite TKIP+128 bit WEP using EAP(LEAP). *Require LEAP username and password*. wpa-psk64 = Migration mode w/Cipher suite TKIP+40 bit WEP using WPA PSK. *Requires WPA Passphrase.* wpa-psk128 = Migration mode w/Cipher suite TKIP+128 bit WEP using WPA PSK. *Requires WPA Passphrase.*
WPA Passphrase (Preshared Key)	Enter your WPA passphrase.
Re-enter Passphrase	Confirms WPA passphrase entry
Leap User ID	User ID for Leap security mode
Leap Password	Password for Leap security mode
Re-enter Leap Password	Confirm password for Leap security mode
WEP Authentication	Enables or disables WEP authentication: Automatic = automatically detects the authentication. (default) Open System = communicates the key across the network. Shared Key = allows communication only with devices with identical WEP settings.
Default Key	Selects the default WEP Key from 1 – 4 if Shared Key or Both is selected for WEP Authentication. Default is WEP Key 1.
WEP Key 1 through 4	Specify up to four WEP key values: If WEP Encryption = 64, enter 10 hexadecimal digits for each key. If WEP Encryption = 128, enter 26 hexadecimal digits for each key.

Wifi Configuration Page (continued…)

Advanced Settings	
Maximum Transmission Rate	Specifies the Module's maximum wireless transmission rate. Default is 2 Mbps.
Use Fixed Rate for Transmission	Sets the 802.11 behavior for Ad Hoc mode. Default is 0.

WLAN IP Settings	
DHCP	Displays the current DHCP mode status.
DHCP Fallback	This is the IP address to use with DHCP is enabled and a DHCP server cannot be found.
Retain DHCP Values	This instructs the wireless LAN to retain the latest DHCP provided IP address. This address will be used in the event a DHCP server cannot be found on a subsequent restart.
Persistent DHCP	This instructs the wireless LAN to copy the latest DHCP provided IP address to a static address.
Enable MAC Cloning	This instructs the wireless interface to assume the MAC address of the printer when connecting to the wireless network.
DHCP Client Name	Specifies the Module's DHCP client name. This should be different than the NetBIOS name specified on the TCP/IP page.
DHCP Fixed Interval Retransmission	Sets the DHCP retransmission mode to either Exponential (not checked) or Fixed interval (checked). Default is not checked.
DHCP Retransmit Interval	Sets the DHCP retransmission interval to use when "Enable DHCP Fixed Interval Retransmission" is set to fixed. This is an integer with a range of 1-64. Default is 15.
DHCP Acquire Time Limit	Sets the number of seconds the DHCP should attempt to acquire an IP address before using the fallback IP address, if wl-dhcp-fb is on. An integer with a range of 1-255. Default is 150.
DHCP Fallback IP Address	Displays the fallback IP address. Default is 192.168.10.1
DHCP Fallback Subnet	Displays the fallback subnet mask. Default is 255.255.255.0
DHCP Fallback Gateway	Sets the fallback gateway address. Default is 0.0.0.0.
Static BSS Address	Specifies the radio module's static IP address; up to four octets separated by a period. If Enable DHCP is *checked*, this parameter is ignored. Default is 0.0.0.0.
Subnet Mask	Displays the radio module's subnet mask; up to four octets separated by a period. Default is 255.255.255.0
Default Gateway	Displays the Module's LAN IP address; up to four octets separated by a period. Default is 192.168.0.1.
Primary DNS	Displays the primary DNS server address for DNS lookups. If DHCP is enabled, the IP address provided by the DHCP server is used. Default is 0.0.0.0.
Secondary DNS	Displays the secondary DNS server address for DNS lookups when the primary DNS server is unavailable. Default is 0.0.0.0.

C.5 DMX Config Utility

DMXConfig (located on the Accessories CD-ROM) is a Windows based configuration utility that allows the user to make changes to the existing printer setup via a direct connection to the host computers serial and parallel connection. This is a vital tool for the use and configuration of wired and wireless printer setup (especially for printers without displays).

☑ Be sure to use the DMXConfig utility located on the Accessories CD-Rom that is included with your printer. Older versions might not operate correctly with some printers. For the latest version please visit our web site at www.datamaxcorp.com.

Wired Configuration - Static IP Address:

☑ ***Note:*** The following example uses the DMXConfig software utility to configure the printer.

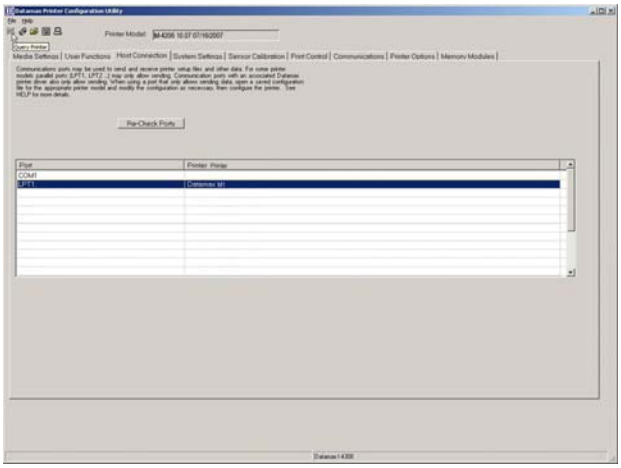

1. Connect the host to the printer with a serial or parallel cable.
2. Turn on the printer.
3. Launch the DMXConfig utility. Query the printer by using the Query Printer toolbar button (top-left). This will connect to the printer and get the current printer settings.

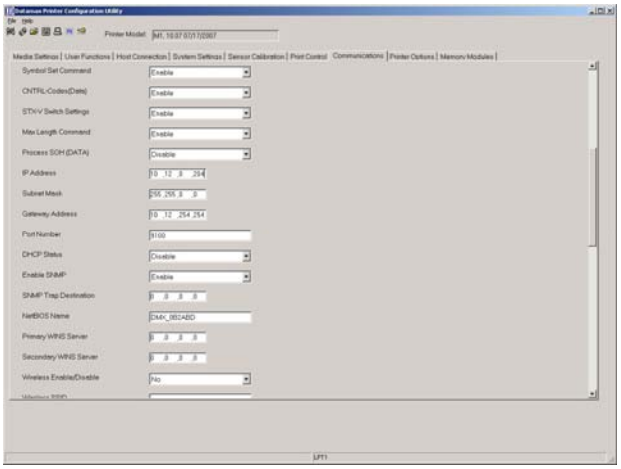

4. Next select the Communications tab, scroll down to the network parameters. Set **DHCP Status** to **Disable**, then set following with appropriate values for your network:

   IP Address
   Subnet Mask
   Gateway Address

5. Send the settings to the printer using the Configure Printer toolbar button.
6. The printer will reset and will connect to your network.

Once the previous steps have been successfully completed you may now use the IP Address to:

> Install a printer driver, and start printing from your Windows applications. See section, ***C.6 Installing the Printer Driver.***

-or-

> Browse to the printer's internal web pages for advanced configuration. See section, ***C.4 Printer's Internal Web Pages.***

Wireless Configuration - Adhoc Mode:

> ☑ ***Note:*** The following example uses the DMXConfig software utility to configure the printer. On printers equipped with a display, the same settings can be changed using the printer's menu system via the front panel under COMMUNICATIONS > NIC ADAPTER.

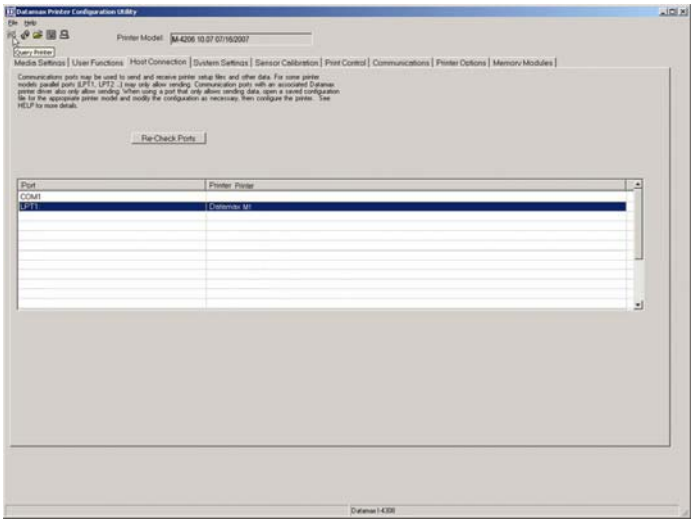

1. Connect the host to the printer with a serial or parallel cable.

2. Turn on the printer.

3. Launch the DMXConfig utility. Query the printer by using the Query Printer toolbar button (top-left). This will connect to the printer and get the current printer settings.

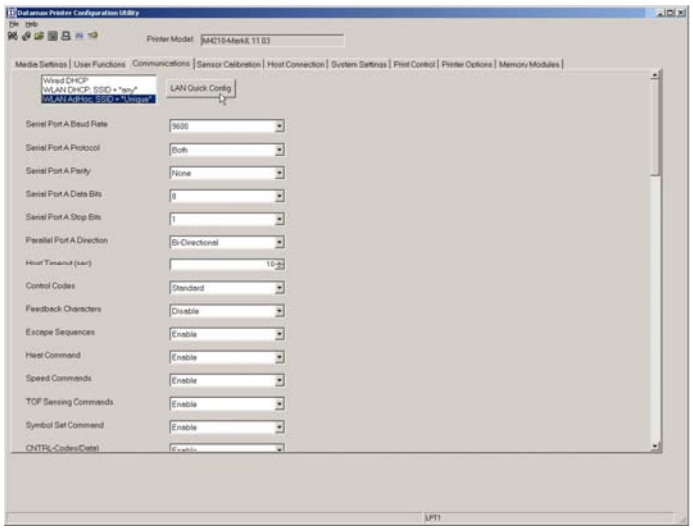

4. Next select the Communications tab. Select WLAN AdHoc, SSID = "Unique" and then click the button to the right. The printer will now reset itself and be configured to the following settings:

   Wireless Mode: **Enabled**
   IP: **192.168.10.26**
   SSID: *MAC Address of the printer (unique value for each printer, listed on the Network Report Label).*
   Subnet Mask: **255.255.255.0**
   Gateway: **192.168.10.26**
   BSS: **192.168.10.1** (this is the IP of the radio card and is not to be used for data transfer)

Once the previous steps have been successfully completed you may now use the IP Address to:

> Install a printer driver, and start printing from your Windows applications. See section, ***C.6 Installing the Printer Driver.***

-or-

> Browse to the printer's internal web pages for advanced configuration. See section, ***C.4 Printer's Internal Web Pages.***

C.6 Installing the Printer Driver

The following screen shots are taken from Windows 2000, other versions will be similar.

1

Start the Windows "Add Printer Wizard". The following screen should appear, click 'Next>'.

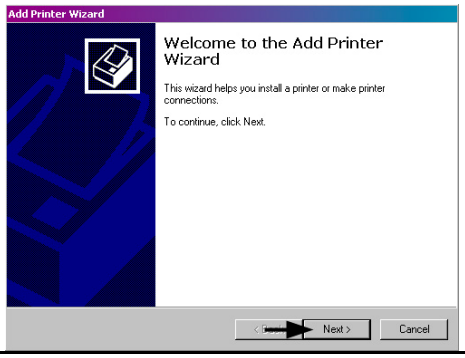

2

Make sure that 'Local Printer' is selected and then click 'Next'.

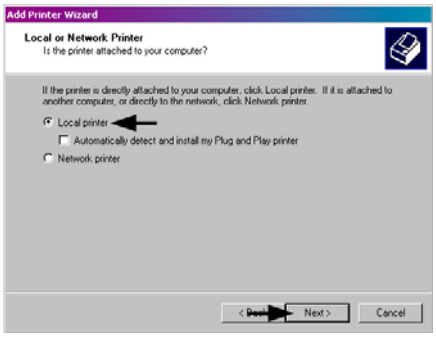

3

Select on 'Create a new port:' and then select 'Standard TCP/IP Port' from the drop down menu. Click 'Next'

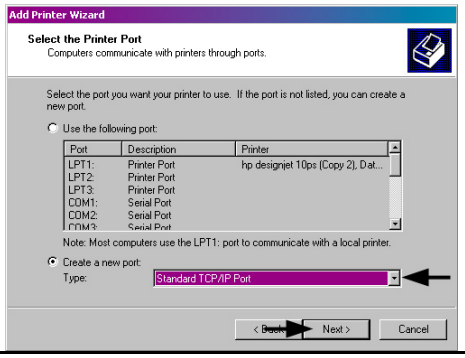

4

Click 'Next'.

5

In the 'Printer Name or IP Address:' field enter the IP address of your printer. The 'Port Name' field <u>does not</u> need to be changed. When finished click 'Next'.

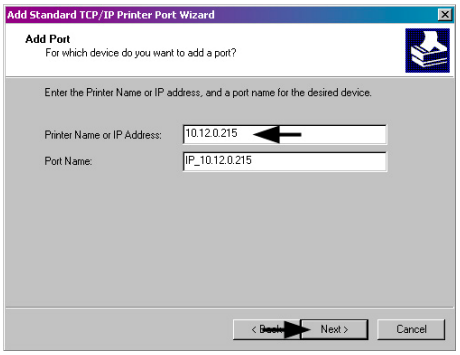

6

Make sure 'Standard' is selected and then click 'Next'.

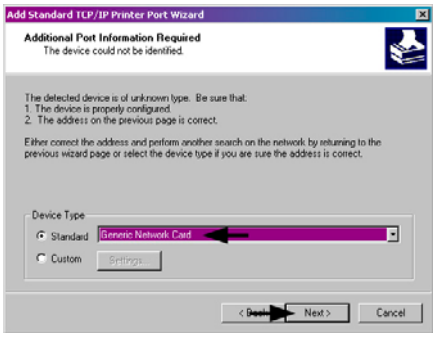

7

Confirm your settings and then click 'Finish'.

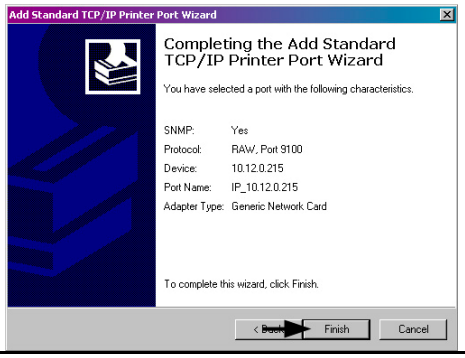

8

Click on 'Have Disk'.

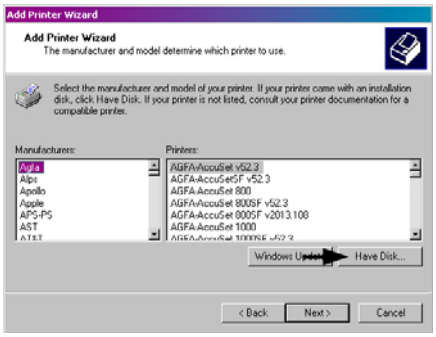

9

Insert the Accessories CD-Rom and click 'Browse'.

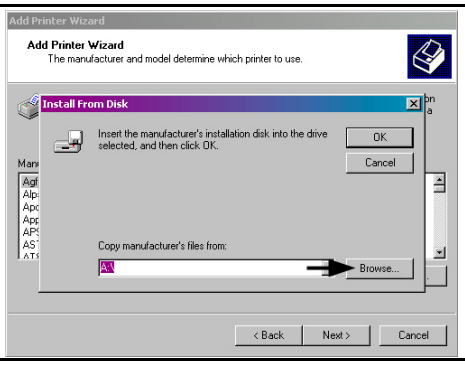

10

Browse to the "\DRIVERS\Seagull " folder on the CD-ROM, make sure the file "Datamax for 95, 98, me, 2000, and xp.inf" is selected and click 'OK'.

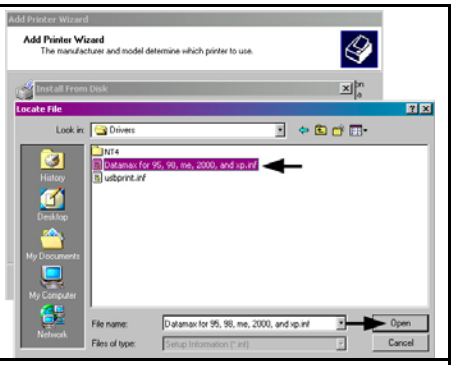

11

Click 'OK'.

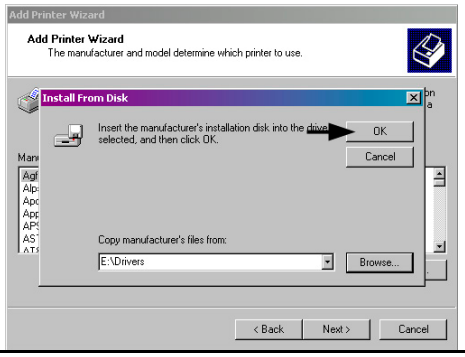

12

Choose your printer from the list and then click 'Next'.

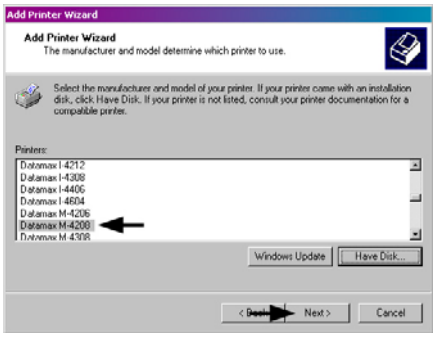

13

Name your printer in the 'Printer name:' field. Next select whether or not to set this printer as your default printer. Then Click 'Next'.

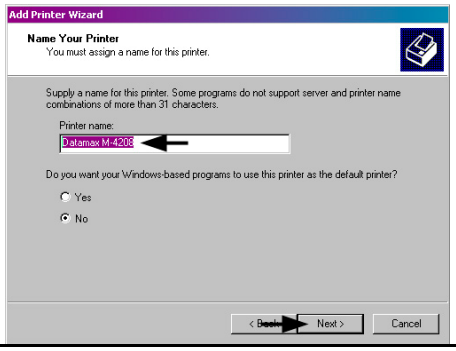

14

Select whether or not to share this printer on your network. Then Click 'Next'

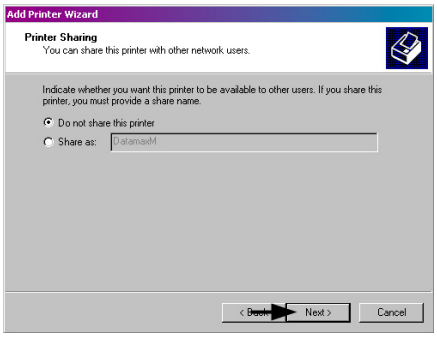

15

Select 'No' then Click 'Next'.

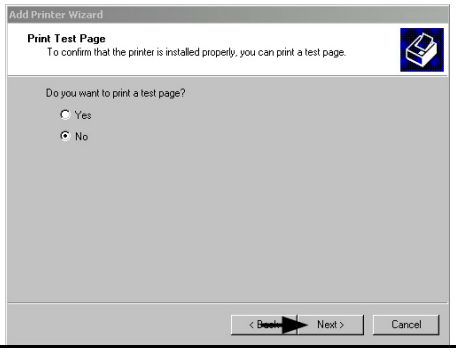

16

Confirm your settings and then click 'Finish'.

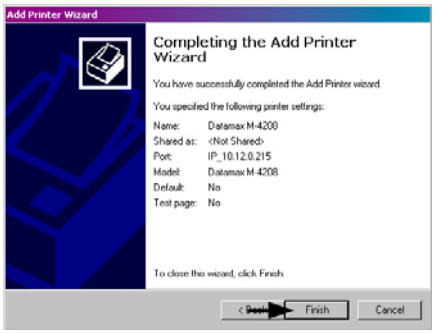

17

If prompted with the "Digital Signature Not Found" window, click 'Yes' to continue installation.

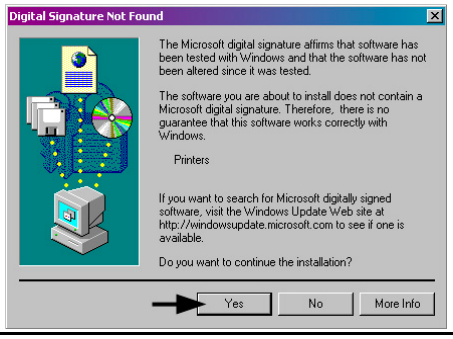

18

Your computer will now copy the necessary files from the CD-ROM.

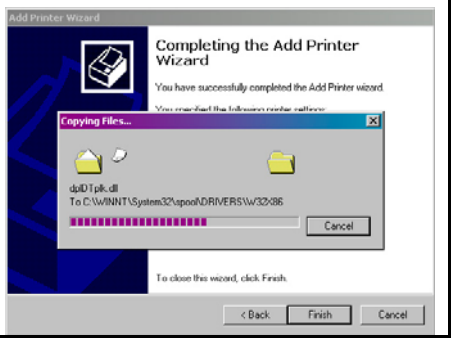

The driver and port installation is now complete. The printer can be selected through any Window's application.

D Warranty

Datamax-O'Neil
Limited Warranty Statement

E-Class 4205e and 4304e Printer

Printer

Datamax-O'Neil warrants to Purchaser that under normal use and service, the E-Class 4205e and 4304e Printer, (with the exception of the thermal printhead) purchased hereunder shall be free from defects in material and workmanship for a period of (365) days from the date of shipment by Datamax-O'Neil.

Expendable and/or consumable items or parts such as lamps, fuses, labels and ribbons are not covered under this warranty. This warranty does not cover equipment or parts that have been misused, altered, neglected, handled carelessly, or used for purposes other than those for which they were manufactured. This warranty also does not cover loss, damages resulting from accident, or damages resulting from unauthorized service.

Thermal Printhead

This warranty is limited to a period of one year, (365 days), or 1,000,000 linear inches of use, whichever comes first, for the E-Class 4205e and 4304e thermal printhead. This one year (365 days) warranty is valid only if a Datamax-O'Neil approved thermal label media is used, as defined in the then current Datamax-O'Neil list of approved thermal/thermal transfer media, a copy of which is available from Datamax-O'Neil. Failure to use Datamax-O'Neil approved media is justification for invalidation of this thermal printhead warranty. This warranty does not cover printheads which have been misused, altered, neglected, handled carelessly, or damaged due to improper cleaning or unauthorized repairs.

Warranty Service Procedures

If a defect should occur during the warranty period, the defective unit shall be returned, freight and insurance prepaid, in the original shipping containers, to Datamax-O'Neil at: 4501 Parkway Commerce Blvd., Orlando, Florida, 32808. A Return Material Authorization (RMA) number must be issued before the product can be returned. To open an RMA please call the Datamax-O'Neil Customer Service Department at (407) 523-5550. Please include your RMA number on the outside of the box and on the shipping document. Include a contact name, action desired, a detailed description of the problem(s), and examples when possible with the defective unit. Datamax-O'Neil shall not be responsible for any loss or damages incurred in shipping. Any warranty work to be performed by Datamax-O'Neil shall be subject to Datamax-O'Neil's confirmation that such product meets Datamax-O'Neil warranty. In the event of a defect covered by its warranty, Datamax-O'Neil will return the repaired or replaced product to the Purchaser at Datamax-O'Neil's cost.

With respect to a defect in hardware covered by the warranty, the warranty shall continue in effect until the end of the original warranty period, or for sixty (60) days after the repair or replacement, whichever is later.

General Warranty Provisions

Datamax-O'Neil makes no warranty as to the design, capability, capacity or suitability of any of its hardware, supplies, or software.

Software is licensed on an "as is" basis without warranty. Except and to the extent expressly provided in this warranty and in lieu of all other warranties, there are no warranties, expressed or implied, including, but not limited to, any warranties of merchantability or fitness for a particular purpose.

Purchaser shall be solely responsible for the selection, use, efficiency and suitability of Datamax-O'Neil's products.

Limitation of Liability

In no event shall Datamax-O'Neil be liable to the purchaser for any indirect, special or consequential damages or lost profits arising out of or relating to Datamax-O'Neil's products, or the performance or a breach thereof, even if Datamax-O'Neil has been advised of the possibility thereof. Datamax-O'Neil's liability, if any, to the purchaser or to the customer of the purchaser hereunder shall in no event exceed the total amounts paid to Datamax-O'Neil hereunder by the purchaser for a defective product.

In no event shall Datamax-O'Neil be liable to the purchaser for any damages resulting from or related to any failure or delay of Datamax-O'Neil in the delivery or installation of the computer hardware, supplies or software or in the performance of any services.

Some states do not permit the exclusion of incidental or consequential damages, and in those states the foregoing limitations may not apply. The warranties here give you specific legal rights, and you may have other legal rights which vary from state to state.

Glossary

alphanumeric Consisting of alphabetic, numeric, punctuation and other symbols.

backing material The silicon-coated paper carrier material to which labels with adhesive backing are affixed. Also referred to as "liner".

bar code A representation of alphanumeric information in a pattern of machine-readable marks. The basic categories are divided into one-dimensional (UPC, Code 39, Postnet, etc.) and two-dimensional barcodes (DataMatrix, MaxiCode, PDF417, etc.).

burn line The row of thermal elements in the printhead that create the images on the media.

calibration The process through which sensor readings are entered into the printer for correct sensor function (for example, detection of a given media type) and TOF positioning.

character set The entire complement of alphanumeric symbols contained in a given font.

checksum An alphanumeric error detection method used in many bar code symbologies for informational security.

continuous media An uninterrupted roll or box of label or tag media that contains no gap, notch, or mark to separate individual labels or tags.

core diameter The inside diameter measurement of the cardboard core at the center of a ribbon or media roll.

cutter A mechanical device with a rotary or guillotine type blade used to cut labels or tags following printing.

defaults The functional setting values returned following a factory reset of the printer.

diagnostics Programs used to locate and diagnose hardware problems.

die-cut media Media that has been cut into a pattern using a press, where the excess paper is removed leaving individual labels, with gaps between them, attached to a backing material.

direct thermal The printing method that uses a heat sensitive media and only the heat of the thermal printhead to create an image on the label.

direct thermal media Media coated with special chemicals that react and darken with the application of heat.

DPI (dots per inch) A measurement of print resolution, rated in the number of thermal elements contained in one inch of the printhead. Also referred to as "resolution".

DPL Programming Language programming commands used specifically for control of and label production in Datamax-O'Neil desktop printers. A complete listing of commands can be found in the *Class Series Programmer's Manual.*

fan-fold Media that is folded and stacked.

feed speed The speed at which the media moves under the printhead in non-printed areas and between labels.

Flash memory Non-volatile memory (does not require printer power to maintain data) that can be erased and reprogrammed, used to hold the printer's operating programs.

font A set of alphanumeric characters that share a particular typeface.

gap A space between die-cut or notched labels used to sense the top of form.

IPS (inches per second) Imperial measurement of printer speeds.

label A paper or synthetic printing material, typically with a pressure sensitive adhesive backing.

label length The distance from the top of the label to the bottom of the label as it exits the printer.

label repeat The distance from the top of one label to the top of the next label.

label tracking Excessive lateral (side to side) movement of the media as it travels under the printhead.

label width The left to right measurement of the label as it exits the printer.

mark Generalized term to indicate the label top of form indicator.

media Generalized term for all types of printing stocks, including: roll fed, continuous, die-cut, reflective, and fanfold.

media hub Device in the printer used to support roll media.

media sensor An electronic device equipped with photosensors to detect media and the top of form on die-cut, notched or reflective media.

notched stock Media, typically tag stock, with holes or notches in the material that is used to signal the top of form. The printer must be set to 'gap' to use this media type.

preprinted media Label stock that contains borders, text, or graphics, floodcoating, etc.

perforation Small cuts extending through the backing and/or label material to facilitate their separation. Also referred to as "perf".

print speed The speed at which the media moves under the printhead during the printing process.

reflective media Media imprinted with carbon-based black marks on the underside of the material, which is used to signal the top of form when the 'reflective' sensor is enabled.

registration Repeatable top to bottom alignment of printed labels.

reverse speed The backward rate of media motion into the printer during tear-off, peel and present and cutting operations for positioning the label at the start of print position.

ribbon An extruded polyester tape with several layers of material, one of which is ink-like, used to produce an image on the label. Also referred to as "foil".

ribbon wrinkle An undesirable overlapping of the ribbon during the printing process that leads to voids on the printed label, typically caused by an improper ribbon width adjustment.

roll media A form of media that is wound upon a cardboard core.

start of print The position on the label where the printing actually begins.

tag stock A heavy paper or synthetic printing material, typically featuring a notch or black mark for TOF and no adhesive backing.

thermal transfer The printing method that creates an image by transferring ink from a ribbon onto the media using the heat from the thermal printhead.

TOF (top of form) The start of a new label as indicated by a label gap, notch, mark or programming.

void An undesirable blank space in a printed image.